THIS DRAWING IS UNPUBLISHED. RELEASED FOR PUBLICATION -,- .
© COPYRIGHT - By - ALL RIGHTS RESERVED.

LOC	DIST
AF	50

REVISIONS

P	LTR	DESCRIPTION	DATE	DWN	APVD
	F	REVISED PER ECR-12-013518	23NOV2012	KH	PD

1 ACCEPTS WIRE SIZE [#20-#16] AWG.

2 INSULATION RANGE IS 2.29-3.30 [.090-.130] DIA.

3 CONTINUOUS STRIP ON REELS.

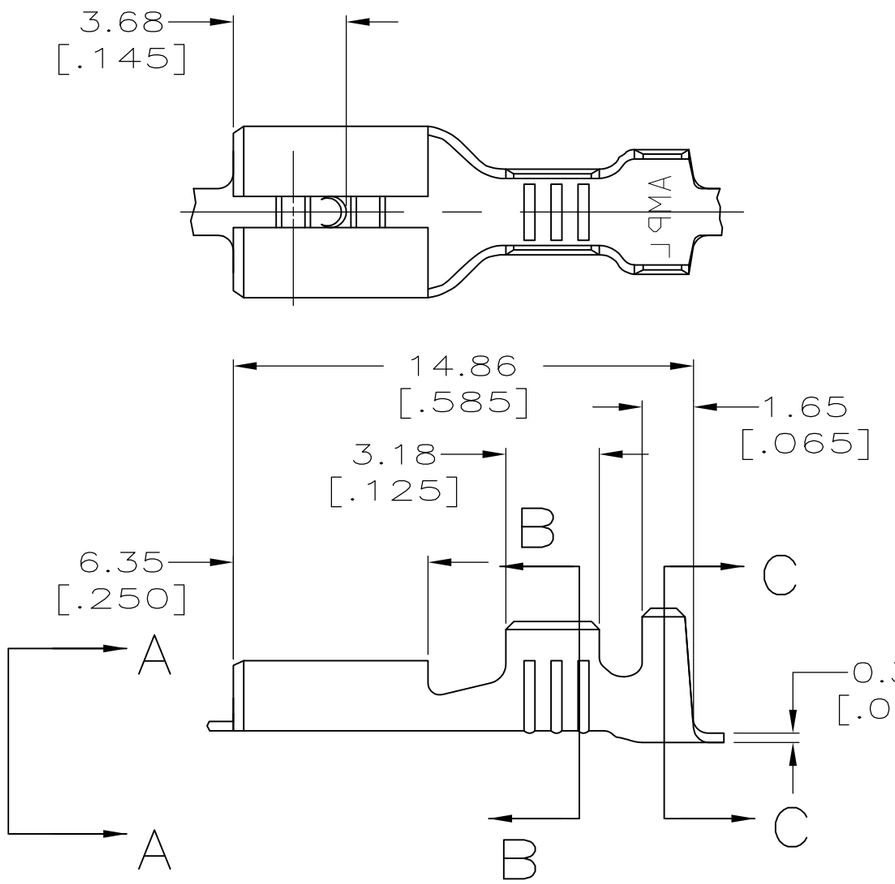

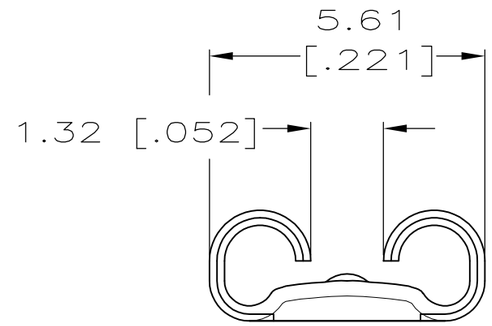

VIEW A-A
SCALE 8:1

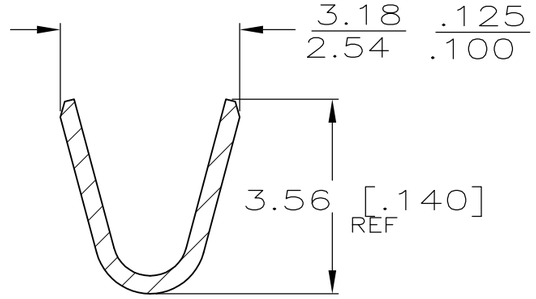

SECTION B-B
SCALE 8:1

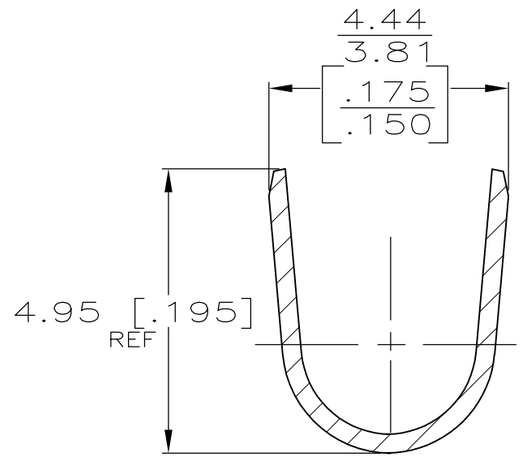

SECTION C-C
SCALE 8:1

	FINISH	MATING TAB THICKNESS	PART NUMBER
	TIN	0.51±0.025	63556-2
OBSOLETE	-	[.020±.001]	~~63556-1~~

F OR O	3.56 [.140]	4.78 [.188]	F	2.29 [.090]	1.52 [.060]	1.3 MM² [16]
					1.35 [.053]	0.8 MM² [18]
					1.24 [.049]	0.5 MM² [20]
TYPE	WIDTH	STRIP LENGTH ±0.38 ±[.015]	TYPE	WIDTH	±.051 [±.002] HEIGHT	WIRE
INSUL BARREL CRIMP		WIRE BARREL CRIMP				

THIS DRAWING IS A CONTROLLED DOCUMENT.

DIMENSIONS: mm [INCHES]

TOLERANCES UNLESS OTHERWISE SPECIFIED:

0 PLC	± -
1 PLC	± -
2 PLC	± 0.25 [.010]
3 PLC	± -
4 PLC	± -
ANGLES	± -

MATERIAL: BRASS

FINISH: SEE TABLE

DWN	JR RUTH	11/8/89
CHK	MS FEHER	11/8/89
APVD	C MEYERS	11/8/89
PRODUCT SPEC	—	
APPLICATION SPEC	—	
WEIGHT	—	

TE Connectivity

NAME: RECEPTACLE, LIF, FASTON, 4.75 [.187] SERIES

SIZE	CAGE CODE	DRAWING NO	RESTRICTED TO
A3	00779	C-63556	—

CUSTOMER DRAWING | SCALE 5:1 | SHEET 1 OF 1 | REV F