THIS DRAWING IS UNPUBLISHED. RELEASED FOR PUBLICATION 20
© COPYRIGHT 20 BY TYCO ELECTRONICS CORPORATION, ALL RIGHTS RESERVED.

LOC	DIST
CE	00

REVISIONS

P	LTR	DESCRIPTION	DATE	DWN	APVD
	B2	REVISE NOTE 2	12MAR2009	BB	SB

1. MATERIAL: PROTECTIVE COVER: PP, COLOR: WHITE, UL 94 HB. *
   FERRULE SUB ASSEMBLY: ZIRCONIA/METAL.
   COMPRESSION SPRING: STAINLESS STEEL.
   HOUSING: PPSU, COLOR:SEE DASH NO'S.
   INNER TUBING: PTFE, COLOR:CLEAR, UL VW-1.
   REAR BODY : METAL
   BOOT: TPE, COLOR:BEIGE, UL 94 V-0. *
   *RATED AT QUALIFYING THICKNESS.

2. INSTRUCTION SHEET: 408-8675 AVAILABLE FOR DOWNLOAD AT
   www.tycoelectronics.com/documents OR www.ampnetconnect.com/foguide.

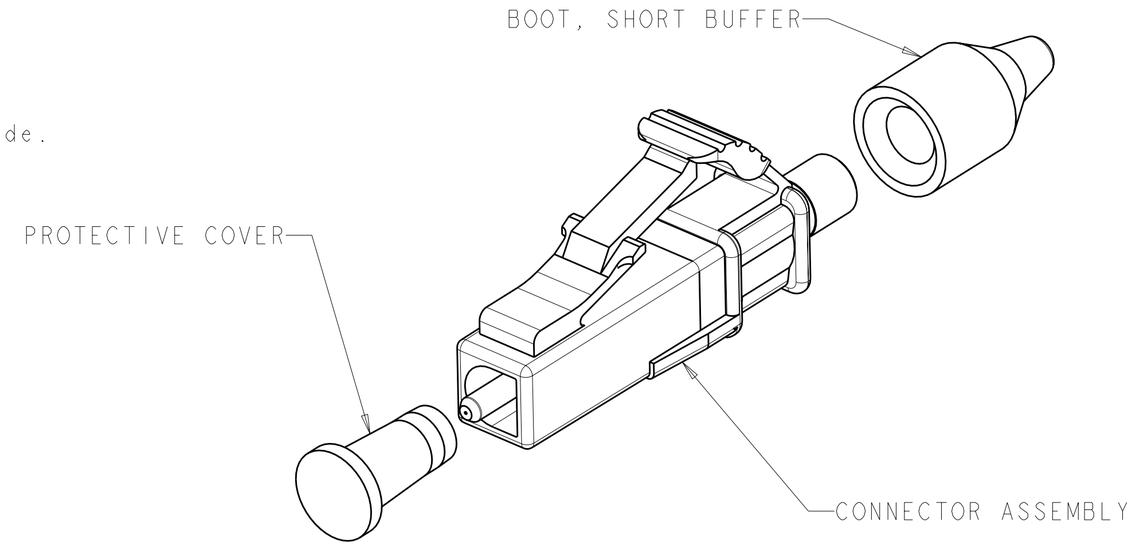

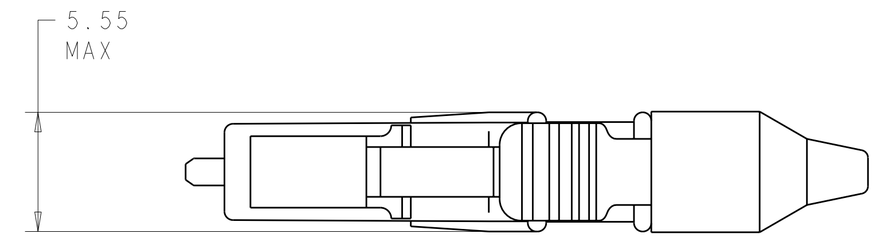

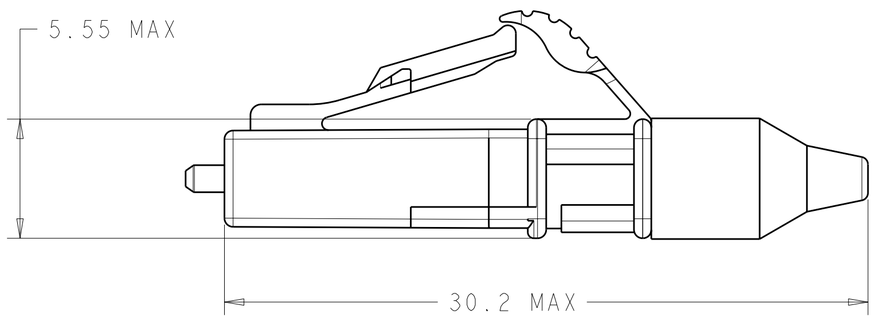

COLOR	PART NO
SLATE	1-1828861-0
ORANGE	1828861-9
VIOLET	1828861-8
BROWN	1828861-7
AQUA	1828861-6
ROSE	1828861-5
BLUE	1828861-4
GREEN	1828861-3
YELLOW	1828861-2
RED	1828861-1

THIS DRAWING IS A CONTROLLED DOCUMENT FOR TYCO ELECTRONICS CORPORATION. IT IS SUBJECT TO CHANGE AND THE CONTROLLING ENGINEERING ORGANIZATION SHOULD BE CONTACTED FOR THE LATEST REVISION.

DIMENSIONS: MM/[IN]

TOLERANCES UNLESS OTHERWISE SPECIFIED:
0 PLC ±-
1 PLC ±0.1/[.004]
2 PLC ±0.01/[.0004]
3 PLC ±-
4 PLC ±-
ANGLES ±-

MATERIAL -
FINISH -

DWN D. ERDMAN 22FEB2006
CHK M GURRERI 22FEB2006
APVD D BAECHTLE 22FEB2006
PRODUCT SPEC -
APPLICATION SPEC -
WEIGHT -

Tyco Electronics
Tyco Electronics
Harrisburg, PA 17105-3608

NAME CONNECTOR KIT, LC, SECURE, SIMPLEX, MM, 900um BUFFER

SIZE	CAGE CODE	DRAWING NO	RESTRICTED TO
A2	00779	C-1828861	

CUSTOMER DRAWING | SCALE 5:1 | SHEET 1 OF 1 | REV B2

AMP 1471-9 REV 31MAR2000

Pro/ENGINEER DRAWING