Huck Fasteners
an Alcoa business

GAGE DATA SHEET

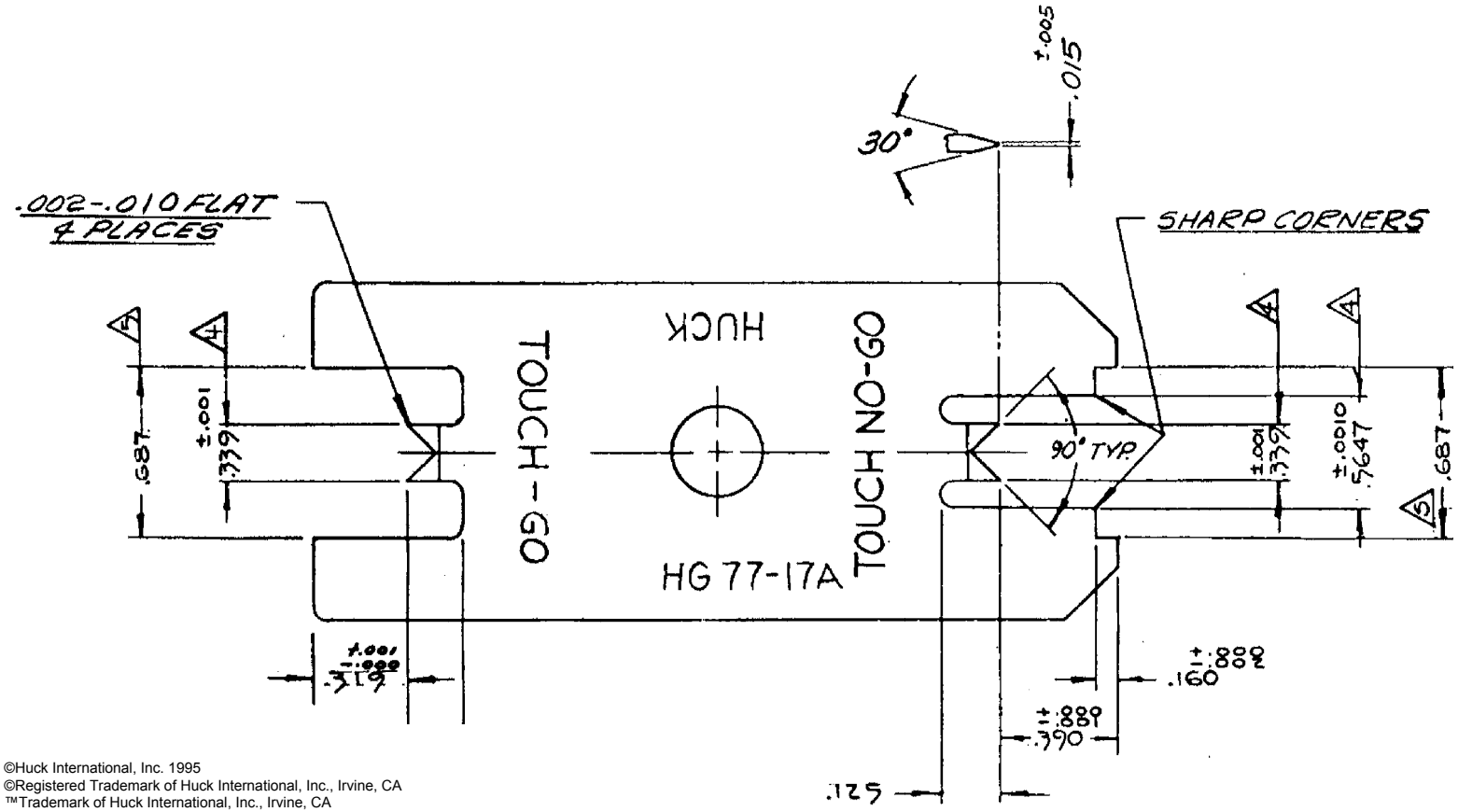

©Huck International, Inc. 1995
©Registered Trademark of Huck International, Inc., Irvine, CA
™Trademark of Huck International, Inc., Irvine, CA

HG77-17A	GAGE NUMBER	Huck International, Inc. Installation System Division 1 Corporate Drive - Kingston, NY 12401
		PIN/COLLAR: NAS1442;1452- 2412;2512/NAS1080( )12* **NAME:** Allot stl - Ti : shear pin / Alum collar **TYPE:** Pull (pin position - swage)
	OTHER	**PRODUCT REVISION:** A **REVISED:** 2/6/2002

* For additional pin & collar information, see National Aerospace Standard : **NAS1080**