THIS DRAWING IS UNPUBLISHED. RELEASED FOR PUBLICATION -,- .
© COPYRIGHT - By - ALL RIGHTS RESERVED.

LOC	DIST
—	—

REVISIONS

P	LTR	DESCRIPTION	DATE	DWN	APVD
	AZ2	ADDITION OF NOTE 7, TEXT "MAX" TO DIM 21.0 IN ZONE D2 AND TEXT "REF" DIM 3.0, 2.8, 3.7, & 3.0 IN ZONE B4 & B3.	21JULY2015	TJ	PS

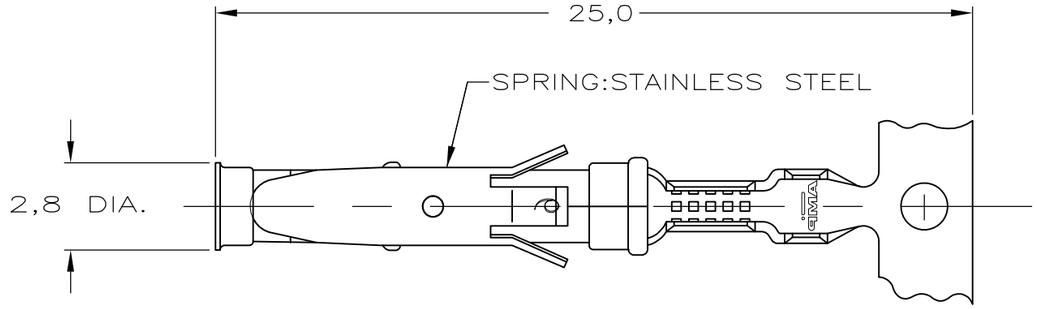

STRIP

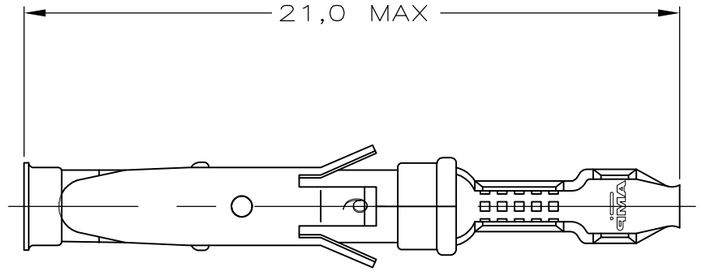

LOOSE-PIECE

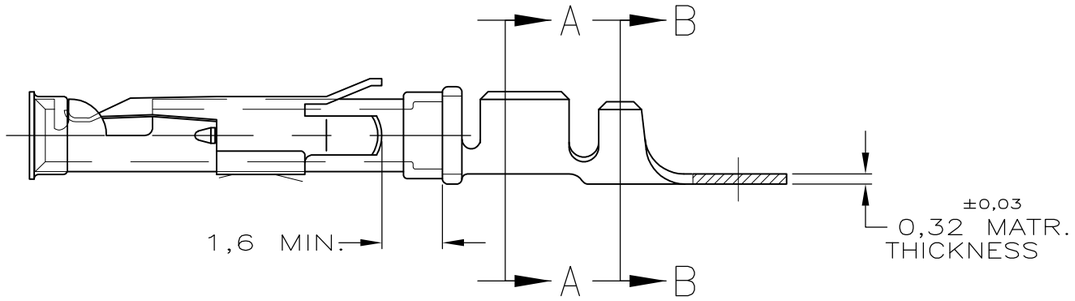

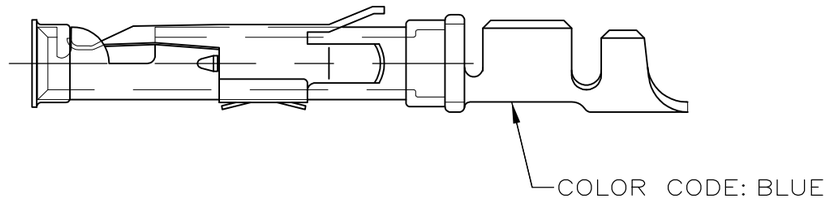

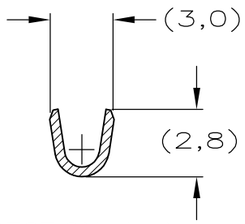

SECTION A-A

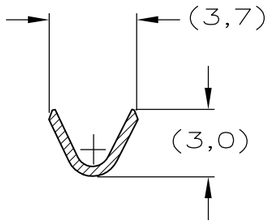

SECTION B-B

5 OBSOLETE	4 5-163083-3	C	1-163084-4	BRASS	ECON.GOLD	21
	1 4 5-163083-2	C		BRASS	SEL.GOLD	22
	1 4 5-163083-1	C		BRASS	EL.TIN	20
	1-163083-4	A	1-163084-4	BRASS	EL.TIN 31	20
5 OBSOLETE	1-163083-3	A	1-163084-3	BRASS	BR.TIN	30
	1-163083-2	A		BRASS	SILVER	28
	1-163083-1	A		BRASS	ECON.GOLD	21
	1-163083-0	B	1-163084-0	BRASS	ECON.GOLD	21
	163083-9	B		BRASS	SILVER	28
	163083-8	A		BRASS	EL.TIN	20
	163083-7	A		BRASS	SEL.GOLD	22
	1 163083-2	B	163084-2	BRASS	SEL.GOLD	22
	1 163083-1	B	163084-1	BRASS	EL.TIN	20
	PART NUMBER	DIRECTION OF REEL	LOOSE-PIECE	MATERIAL	PLATING	

WIRE RANGE : 0,75-1,50 mm² (18-16 AWG)
INSUL. RANGE : 2,0-2,5 mm (.080-.100)

TERMINAL "U" UP.
AMPOMATOR + MINI-APPL. 107-3-FIG.1 → A
← 107-3-FIG.2 B

TERMINAL "U" DOWN.
← 107-3-FIG.4 C

NOTES :

1. UL RECOGNIZED UNDER E28476 VOL VI SEC I
2. FOR CRIMP DETAILS SEE SPEC. 114-19000
3. MEETS PRODUCT SPECIFICATION 108-10042
4. SPECIAL REEL WITH 200PCS FOR REEL-FED HAND-TOOL
5. OBSOLETE PARTS: OBSOLETE CIS STREAMLINING PER D.RENAUD/D.SINISI
6. OBSOLETE
7. OMISSION OF 6 CONTACTS MAX PER REEL OF 5000PCS
31. LUBRICATED

NOTES	MATERIAL	THICKNESS	AREA
20	TIN	2,0 µm	ALL OVER
21	NICKEL GOLD TIN	0,8 µm	ALL OVER CONTACT AREA BARREL
22	NICKEL GOLD GOLD	0,8 µm	ALL OVER CONTACT AREA ALL OVER
23	NICKEL GOLD GOLD	1,2 µm	ALL OVER CONTACT AREA ALL OVER
27	NICKEL SILVER TIN	2,5 µm	ALL OVER CONTACT AREA BARREL
28	SILVER NICKEL	1,5-2,5µm 0,76 µm	ALL OVER
29	SILVER	2,5 µm	ALL OVER
30	NICKEL TIN	1,27 µm 1,27 µm	ALL OVER ALL OVER

THIS DRAWING IS A CONTROLLED DOCUMENT.

DIMENSIONS: mm

TOLERANCES UNLESS OTHERWISE SPECIFIED:
0 PLC ± -
1 PLC ± -
2 PLC ± -
3 PLC ± -
4 PLC ± -
ANGLES ± -

MATERIAL: REFER TABLE
FINISH: REFER TABLE

DWN	M THAJUDEEN	21JULY2015
CHK	GANI NIMBENNAPPA	21JULY2015
APVD	PRASHANTH S	21JULY2015
PRODUCT SPEC	108-10042	
APPLICATION SPEC	114-19000	
WEIGHT	—	

TE Connectivity

NAME: TYPE III+, SIZE 16, SOCKET ASS'Y, 18-16 AWG, 2.0-2.5mm DIA INSULATION

SIZE	CAGE CODE	DRAWING NO	RESTRICTED TO
A3	00779	C-163083	—

CUSTOMER DRAWING | SCALE — | SHEET 1 OF 1 | REV AZ2