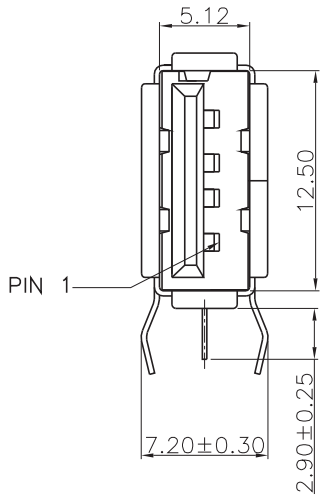

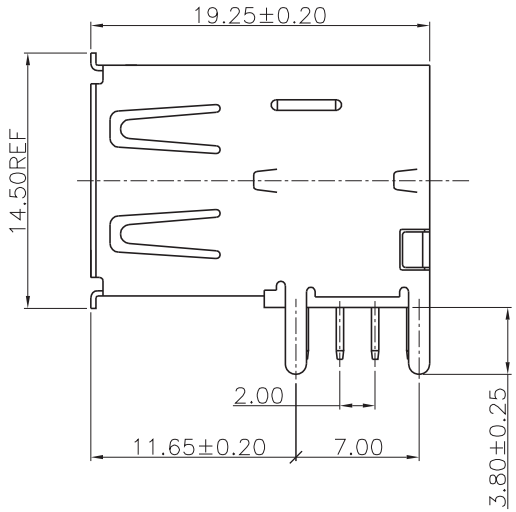

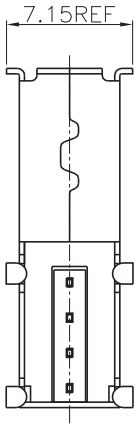

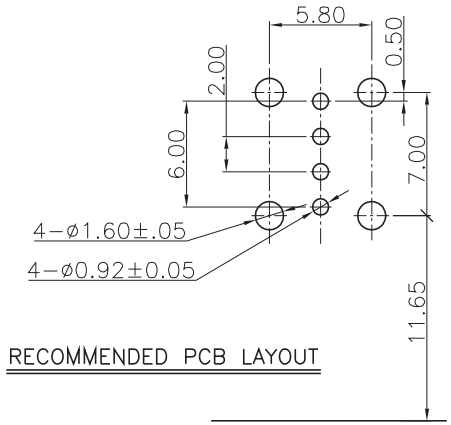

Material:
- Housing: PBT+30% G.F. UL 94V-0
- Contact: Phosphor Bronze
- Color: White
- Front Shell: Brass
- Back Shell: SPCC

Plating:
- Plating: Gold 5μ”
- Shell: Nickel over all plating

Electrical:
- Current rating: 1.5A Max.
- Voltage rating: 30V Max.
- Contact resistance: 30mΩ Max.
- Insulation resistance: 1,000MΩ Min.
- Dielectric withstanding voltage: 500V AC
- Temperature range: -55°C ~ +85°C

Unit: mm

RoHS Compliant

Scale	1:1
TOLERANCE	
X.X	±0.3
X.XX	±0.15
X.XXX	±0.100
DIM	TOL
X.X°	±3.00°
X.XX°	±1.00°
X.XXX°	±0.500°

Id.	Modification	Date	Name
0			

	Date	Name
Drawn	08.01.13	Wilson
Approved	08.01.13	Groll

ASSMANN WSW components
1840 W. Drake Drive, Suite 101 • Tempe, AZ 85283
Toll Free: 1-877-277-6266 • Email: info@assmann.us

Title: USB 1.1 DIP Connector for PCB Mount, A Female type

ASSMANN WSW-No.: A-USB-A-E-R

Drawing-No.:

rev00

Replace

Sheet 1/1