THIS DRAWING IS UNPUBLISHED. RELEASED FOR PUBLICATION - ,N/A .
© COPYRIGHT N/A By - ALL RIGHTS RESERVED.

LOC	DIST
—	—

REVISIONS

P	LTR	DESCRIPTION	DATE	DWN	APVD
	E	REV PER ECO 15-005911	5-28-15	CT	DM

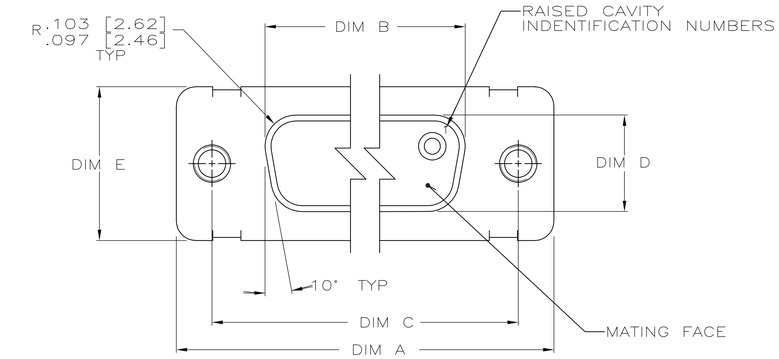

1. THE CONNECTORS DESCRIBED IN THIS DOCUMENT WILL MATE WITH ANY PLUG CONNECTOR WITH THE SAME INSERT ARRANGEMENT.

2. MARKED WITH .047 [1.19]–.062 [1.57] HIGH CHARACTERS.
FAR SIDE REFERS TO THE WIDE SIDE OF THE KEYSTONE.
NEAR SIDE REFERS TO THE NARROW SIDE OF THE KEYSTONE.
IF THE FRONT SHELL IS TOO SMALL FOR "MFG'S"(NAME, BRAND OR LOGO) MFG'S PART NUMBER AND DATE CODE, THEN SPLIT AS FOLLOWS:
A. MFG'S PART NUMBER ON REAR SHELL, NEAR SIDE.
B. "MFG'S" (NAME, BRAND OR LOGO) AND DATE CODE ON FRONT SHELL, NEAR SIDE.

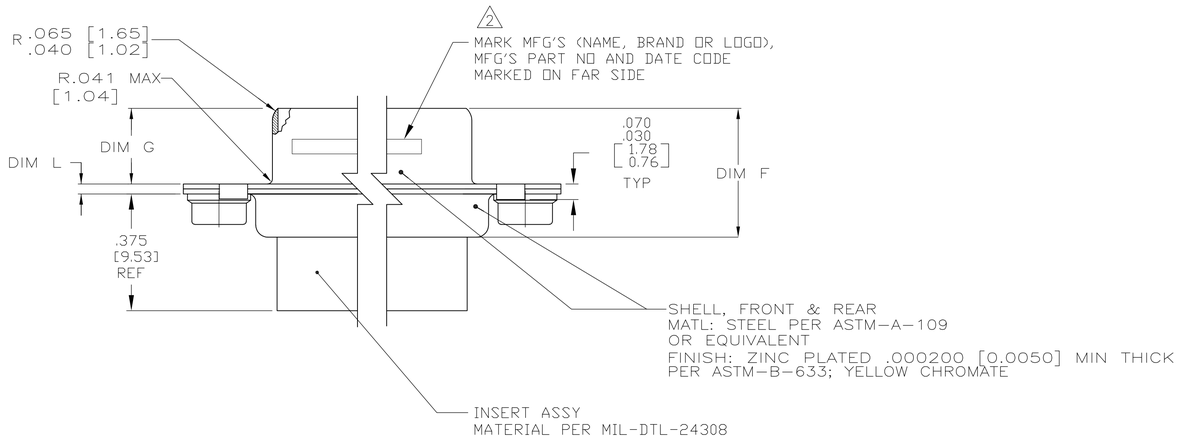

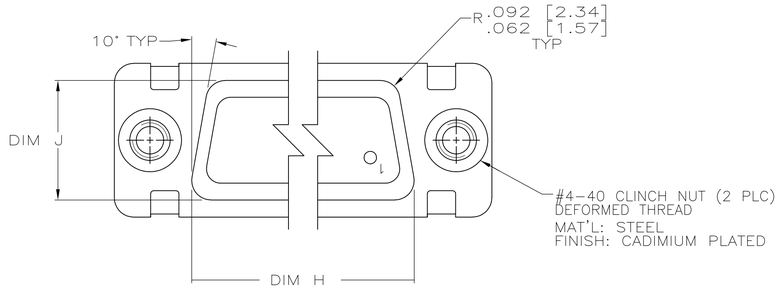

L	J	H	G	F	E	D	C	B	A	INSERT ARRANGEMENT	NO OF POS	SHELL SIZE	PART NUMBER
.049 [1.24] .029 [0.74]	.544 [13.82] .524 [13.31]	2.188 [55.58] 2.168 [55.07]	.248 [6.30] .238 [6.05]	.439 [11.15] .419 [10.64]	.620 [15.75] .590 [14.99]	.428 [10.87] .418 [10.62]	2.411 [61.24] 2.401 [60.99]	2.069 [52.55] 2.059 [52.30]	2.650 [67.31] 2.620 [66.55]	MS18277-1	50	5	1218749-5
.049 [1.24] .029 [0.74]	.432 [10.97] .412 [10.46]	2.282 [57.96] 2.262 [57.45]	.248 [6.30] .238 [6.05]	.439 [11.15] .419 [10.64]	.509 [12.93] .479 [12.17]	.316 [8.03] .306 [7.77]	2.505 [63.63] 2.495 [63.37]	2.164 [54.97] 2.154 [54.71]	2.744 [69.70] 2.714 [68.94]	MS18276-1	37	4	1218749-4
.049 [1.24] .029 [0.74]	.432 [10.97] .412 [10.46]	1.635 [41.53] 1.615 [41.02]	.248 [6.30] .238 [6.05]	.439 [11.15] .419 [10.64]	.509 [12.93] .479 [12.17]	.316 [8.03] .306 [7.77]	1.857 [47.17] 1.847 [46.91]	1.516 [38.51] 1.506 [38.25]	2.103 [53.42] 2.073 [52.65]	MS18275-1	25	3	1218749-3
.040 [1.02] .020 [0.51]	.432 [10.97] .412 [10.46]	1.093 [27.76] 1.073 [27.25]	.248 [6.30] .238 [6.05]	.439 [11.15] .419 [10.64]	.509 [12.93] .479 [12.17]	.316 [8.03] .306 [7.77]	1.317 [33.45] 1.307 [33.20]	.976 [24.79] .966 [24.54]	1.556 [39.52] 1.526 [38.76]	MS18274-1	15	2	1218749-2
.040 [1.02] .020 [0.51]	.432 [10.97] .412 [10.46]	.769 [19.53] .749 [19.02]	.248 [6.30] .238 [6.05]	.439 [11.15] .419 [10.64]	.509 [12.93] .479 [12.17]	.316 [8.03] .306 [7.77]	.989 [25.12] .979 [24.87]	.648 [16.46] .638 [16.21]	1.228 [31.19] 1.198 [30.43]	MS18273-1	9	1	1218749-1

THIS DRAWING IS A CONTROLLED DOCUMENT.

DIMENSIONS: INCHES

TOLERANCES UNLESS OTHERWISE SPECIFIED:
0 PLC ± –
1 PLC ± –
2 PLC ± –
3 PLC ± –
4 PLC ± –
ANGLES ± –

MATERIAL –
FINISH –

DWN C.C.THOMAS 03NOV2005
CHK D.MILLER 11-4-05
APVD D.MILLER 11-4-05
PRODUCT SPEC —
APPLICATION SPEC —
WEIGHT —

TE Connectivity

NAME RECEPTACLE ASSY,AMPLIMITE,SERIES 109, ZINC PLATED WITH 4-40 CLINCH NUTS –

SIZE	CAGE CODE	DRAWING NO	RESTRICTED TO
A1	00779	C-1218749	—

CUSTOMER DRAWING SCALE 4:1 SHEET 1 OF 1 REV E