THIS DRAWING IS UNPUBLISHED.
VERTRAULICHE UNVEROEFFENTLICHTE ZEICHNUNG
© COPYRIGHT – By –

RELEASED FOR PUBLICATION
FREI FUER VEROEFFENTLICHUNG
– , – .

ALL RIGHTS RESERVED.
ALLE RECHTE VORBEHALTEN

MATED WITH:
PASSEDND ZU:
HE.10

REVISIONS
AENDERUNGEN

P	LTR	DESCRIPTION BESCHREIBUNG	DATE	DWN	APVD
	A9	AS PER ECR-16-009336	07DEC2016	GCM	MKO

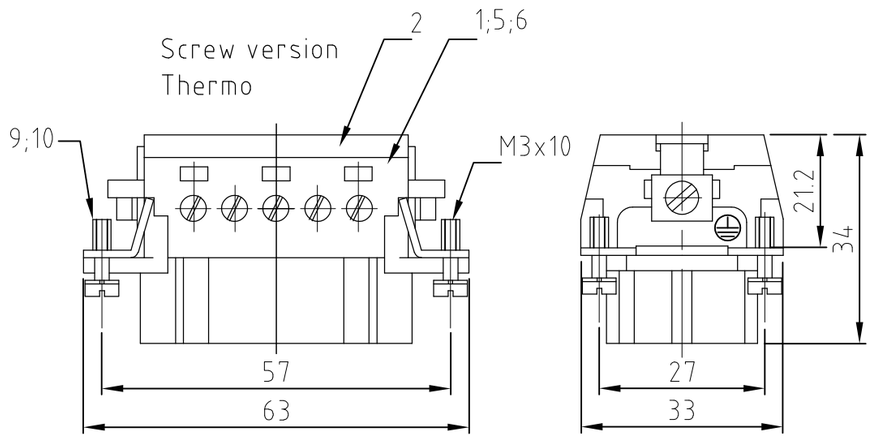

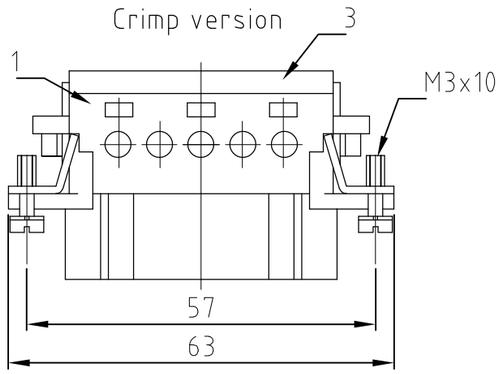

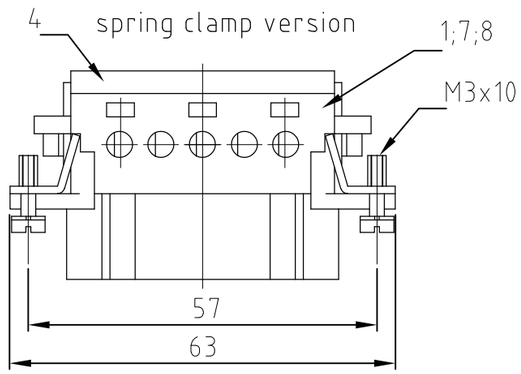

assembly directions

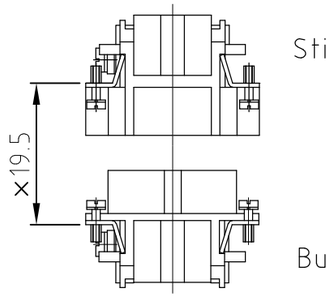

×distance for a safe contact max: max: 21 mm

Printing 1-10 Thermo

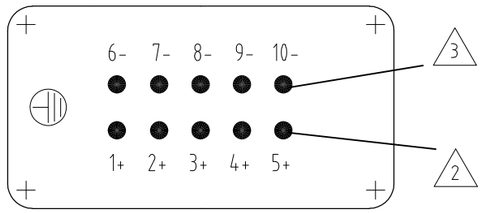

Contact arrangement

view from termination side

Printing 1-10 Screw

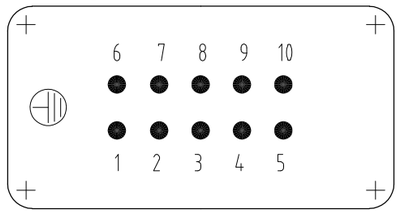

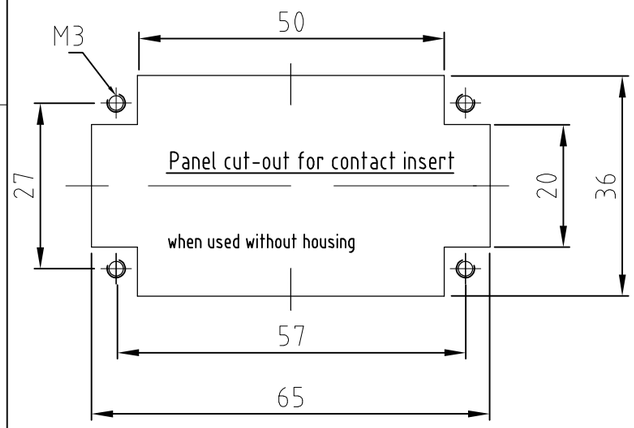

NOTES:

1 SUITABLE CRIMP CONTACTS: SERIES HE/HA
OUTER DIMENSIONS OF INSULATION: MAX. Ø3,2 MM

2 SUITABLE HOOD SIZE 4: SERIES HB; HD;HIP;EMV
SUITABLE INSERTION AND EXTRACTION TOOL:
SCREWDRIVER 0,5x3 DIN 5264

3 Strip lenght: Screw conection 10mm
Spring clamp conection 10mm Crimp conection 7.5mm

4 STANDARDS:
DIN EN 61984; DIN EN 60664-1

5 PACKAGING:
5 SETS IN A CARTON, PRE-MOUNTED

6 SPECIAL PACKAGING: Krauss-Maffei
PACKAGING UNIT: 250 PIECES

HE.10.Bu.SC-AU (OBSOLETE)	HE.10.Bu.S.KM (OBSOLETE)	HE.10.Bu.S-VA	HE.10.Bu.S-AU (OBSOLETE)	HE.10.Bu.SC	HE.10.Bu.C	HE.10.Bu.S-T (OBSOLETE)	HE.10.Bu.S (OBSOLETE)	DESCRIPTION	MATERIAL	SURFACE	COLOR	ITEM NO. POS.	REMARKS
		4						fixing screw	stainless steel	even		10	M3x10
4	4		4	4	4	4	4	fixing scew	steel	nickel plated	blue	9	M3x10
10								contact socket spring clamp	brass	gold plated		8	
				10				contact socket spring clamp	brass	silver plated		7	
			10					contact socket screw version	brass	gold plated		6	
	10	10					10	contact socket screw version	brass	silver plated		5	
1				1				cover spring clamp version			light grey	4	
					1			cover crimp version			light grey	3	
	1	1	1			1	1	cover screw version			light grey	2	
1	1	1	1	1	1	1	1	socket insert			light grey	1	
0-3	0-2	0-1	9-5	7-1	2-3	1-7	1-1						
5	6	5	5	5	5	5	5						

ORDERING TEXT / BESTELLTEXT

THIS DRAWING IS A CONTROLLED DOCUMENT.
DIESE ZEICHNUNG IST EIN KONTROLLIERTES DOKUMENT.

DIMENSIONS: MASSE\NHEITEN: mm

TOLERANCES UNLESS OTHERWISE SPECIFIED: ALLGEMEINTOLERANZEN
0 PLC ± –
1 PLC ± –
2 PLC ± –
3 PLC ± –
4 PLC ± –
ANGLES / WINKEL ± –
n ISO 8015
n ISO 2768 - mH -E
n DIN 16901 - 140

MATERIAL –

FINISH/OBERFLAECHE/FARBE –

DWN Gräf 09.02.99
CHK Schweiger 18.02.99
APVD – —
PRODUCT SPEC PRODUKTSPEZ. —
APPLICATION SPEC VERARBEITUNGSSPEZ. —
WEIGHT GEWICHT

TE Connectivity

NAME
Female insert
Buchseneinsatz HE.10.Bu
–

SIZE A3 | CAGE CODE 00779 | DRAWING NO ZEICHNUNGS-NR. C-1103637 | RESTRICTED TO NUR FUER —

CUSTOMER DRAWING/KUNDENZEICHNUNG

SCALE MASSSTAB 1:1 | SHEET BLATT 1 OF VON 1 | REV A9