used for: D-SUB COMBINATION

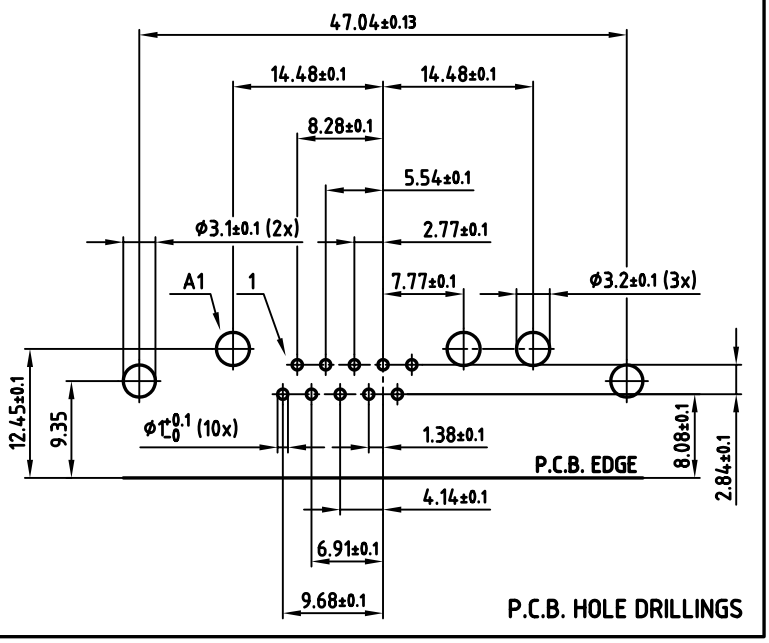

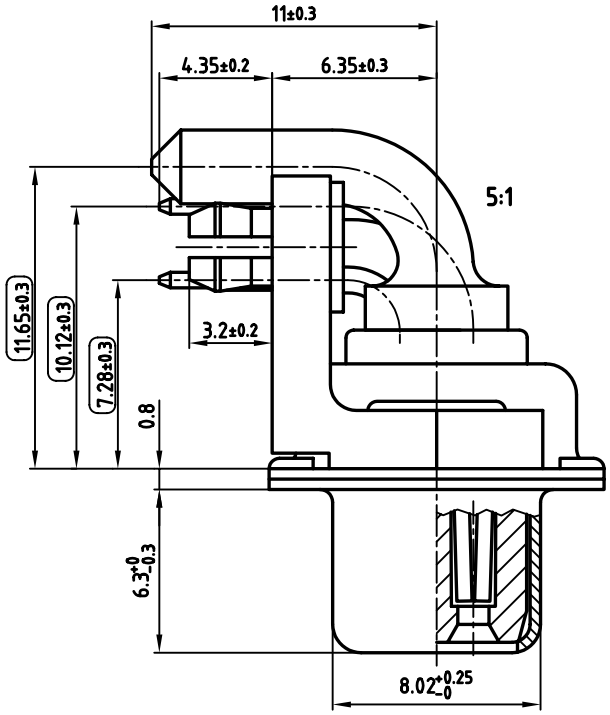

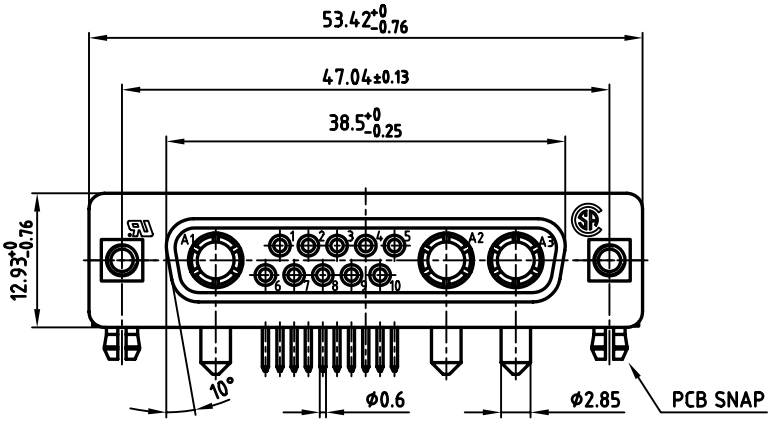

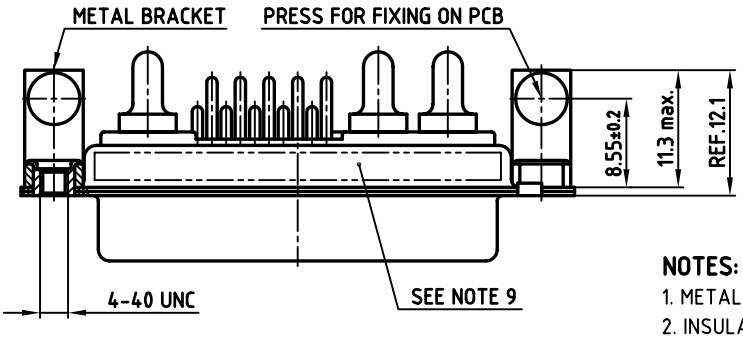

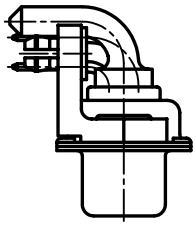

NOTES:

1. METALSHELLS: STEEL; min. 320µ" TIN
2. INSULATORS: PBT GF UL 94 V-0, GREEN
3. SIGNAL CONTACTS: COPPER ALLOY
   PLATING: 30µ" HARD GOLD OVER min. 50µ" NICKEL
4. HIGH POWER CONTACTS 20A: COPPER ALLOY
   PLATING: 30µ" HARD GOLD OVER min. 50µ" NICKEL
5. METAL BRACKET: DIE-CASTING; min. 320µ" TIN over 80µ" NICKEL
6. THREADED INSERT: COPPER ALLOY; min. 200µ" TIN over 80µ" NICKEL
7. PCB-SNAP: COPPER ALLOY; min. 200µ" TIN over 80µ" NICKEL
   PCB-HOLE: Ø3.1±0.1; PCB THICKNESS 1.6mm
8. MAXIMUM TORQUE VALUE FOR THREAD: 6" LBS
9. CONNECTOR IS PART MARKED: 3013W3SCT56N40X CONEC ABC
10. ( ) = CHECK DIMENSION

Directive 2002/95/EC „RoHS" Compliant

APPROVAL # FREIGABE # DEBLOCAGE # AUTOR/ZACION # APPROVAL

CUSTOMER APPROVAL DATE:

NAME: TITLE:

COMPANY NAME:

THIS DRAWING MAY NOT BE COPIED OR REPRODUCED IN ANY WAY, AND MAY NOT BE PASSED ON TO A THIRD PARTY WITHOUT WRITTEN PERMISSION. OWNERSHIP AND COPYRIGHT OF CONEC GmbH

DO NOT ALTER CAD DRAWING BY HAND

rev.	description	date	name
a	Origin		

tolerance

	date	name
2006		
drawn	08.02.	Lehmenkühler
appd.	09.02.	Mickenbecker
norm		
d-old		

CONEC®

scale: 2:1 (5:1)
material: SEE NOTES

title:
D-SUB COMBINATION FEMALE 90°
13W3S
with threaded insert, metal bracket and clip

dwg no: 13K1A1711
AutoCAD 2004 DIN-A 3 sh: 1/1

part no: 3013W3SCT56N40X