swissbit®

Product data sheet

Industrial mSATA SSD (MO-300 full size)

X-200m Series

SATA II - 3.0Gb/s
up to UDMA6 / MDMA2 / PIO4

Standard and industrial temperature grade

BU: Swissbit Group
Date: February 7, 2013
Revision: 1.30
File: X-200m_data_sheet_SA-UxBR_Rev130.doc

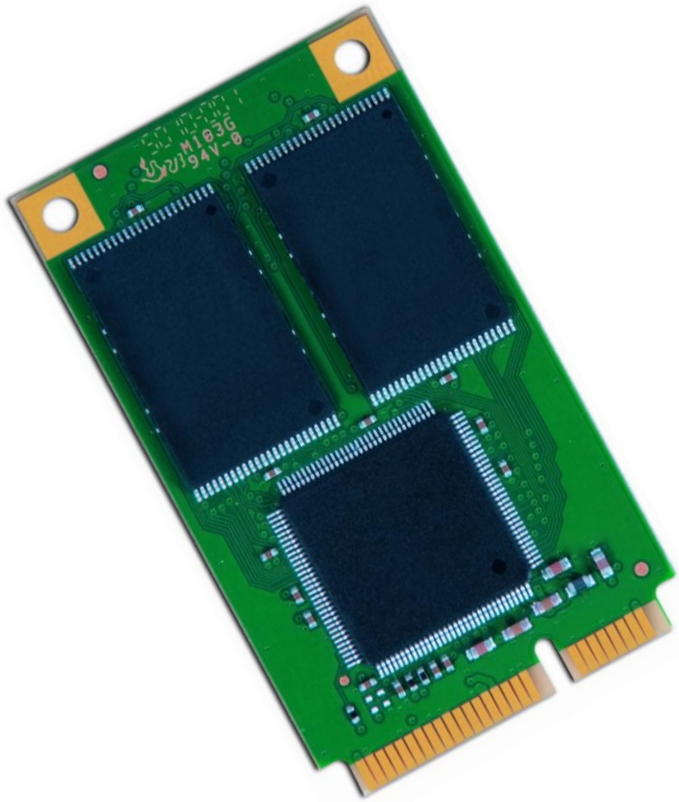

X-200m Series – Industrial MSATA Solid State Drive 2GByte up to 64GByte (MO-300 full size)

1 Feature summary

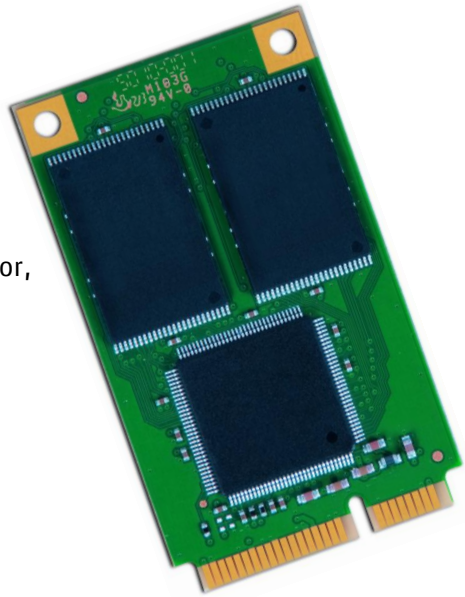

- Form factor:
  - Full-sized mSATA form factor
  - JEDEC MO-300 full size Solid State Drive (SSD)
  - 50.8mm x 29.85mm x 3.3mm
  - 52 pin PCI Express (PCIe) mini-connector (SATA II)
- Interface:
  - SATA Rev 2.6 - 3Gbit/s (1.5Gbit/s compatible)
  - mechanical identical to mini-PCIe and eeePC card connector, but different pinout
- Highly-integrated memory controller
  - max. UDMA6 supported
  - max. PIO mode 4, MDMA2 supported
  - SLC NAND Flash
  - Hardware BCH-code ECC (8 Bit correction per sector for SLC)
  - fix drive configuration
- Low-power CMOS technology
- 3.3V ± 5% power supply
- optional activity LED and write protect switch on request
- No mechanical noise
- Wear Leveling: active wear leveling of static and dynamic data
  The wear leveling assures that dynamic data as well as static data is balanced evenly across the memory. With that the maximum write endurance of the device is guaranteed.
- High reliability
  - MTBF > 2,500,000 hours
  - Data reliability: < 1 non-recoverable error per 10^{14} bits read
- High performance
  - Up to 300MB/s burst transfer rate in SATA II - 3.0Gb/sec
  - Sustained Write performance: up to 95MB/s
  - Sustained Read Performance: up to 120MB/s
- Available densities
  - 2GByte up to 64GByte (SLC NAND Flash)
- S.M.A.R.T. support
- 2 Temperature ranges
  - Commercial Temperature range 0 ... +70°C
  - Industrial Temperature range -40 ... +85°C
- Life Cycle Management
- Controlled BOM
- RoHS compatible

2 Contents

1 FEATURE SUMMARY 2

2 CONTENTS 3

3 ORDER INFORMATION 5

3.1 AVAILABLE STANDARD PART NUMBERS 5

4 PRODUCT SPECIFICATION 6

4.1 PHYSICAL DESCRIPTION 6
4.2 SYSTEM PERFORMANCE 7
4.3 ENVIRONMENTAL SPECIFICATIONS 8
4.4 PHYSICAL DIMENSIONS 8
4.5 RELIABILITY 8
4.6 DRIVE GEOMETRY / CHS PARAMETER 8

5 ELECTRICAL INTERFACE 9

5.1 ELECTRICAL DESCRIPTION 9
5.2 ELECTRICAL SPECIFICATION 10

6 ATA COMMAND DESCRIPTION 11

6.1 CHECK POWER MODE (98H OR E5H) 13
6.2 ERASE SECTOR(S) (C0H) 13
6.3 EXECUTE DRIVE DIAGNOSTIC (90H) 13
6.4 FLUSH CACHE (E7H) 14
6.5 IDENTIFY DEVICE (ECH) 14
6.6 IDLE (97H OR E3H) 21
6.7 IDLE IMMEDIATE (95H OR E1H) 21
6.8 NOP (00H) 21
6.9 READ BUFFER (E4H) 22
6.10 READ DMA (C8H) 22
6.11 READ MULTIPLE (C4H) 22
6.12 READ NATIVE MAX ADDRESS (F8H) 23
6.13 READ SECTOR(S) (20H) 24
6.14 READ VERIFY SECTOR(S) (40H OR 41H) 24
6.15 REQUEST SENSE (03H) 24
6.16 SECURITY DISABLE PASSWORD (F6H) 25
6.17 SECURITY ERASE PREPARE (F3H) 25
6.18 SECURITY ERASE UNIT (F4H) 26
6.19 SECURITY FREEZE LOCK (F5H) 26
6.20 SECURITY SET PASSWORD (F1H) 27
6.21 SECURITY UNLOCK (F2H) 28
6.22 SET FEATURES (EFH) 28
6.23 SET MAX ADDRESS (F9H) 30
6.24 SET MULTIPLE MODE (C6H) 31
6.25 SLEEP (99H OR E6) 31
6.26 S.M.A.R.T. (B0H) 32
6.27 STANDBY (96H OR E2) 32
6.28 STANDBY IMMEDIATE (94H OR E0H) 32
6.29 TRANSLATE SECTOR (87H) 33
6.30 WRITE BUFFER (E8H) 33
6.31 WRITE DMA (CAH) 33
6.32 WRITE MULTIPLE COMMAND (C5H) 34
6.33 WRITE MULTIPLE WITHOUT ERASE (CDH) 34
6.34 WRITE SECTOR(S) (30H) 35
6.35 WRITE SECTOR(S) WITHOUT ERASE (38H) 35

7 S.M.A.R.T. FUNCTIONALITY 36
7.1 S.M.A.R.T. ENABLE / DISABLE OPERATIONS 36
7.2 S.M.A.R.T. RETURN STATUS 36
7.3 S.M.A.R.T. ENABLE / DISABLE ATTRIBUTE AUTOSAVE 37
7.4 S.M.A.R.T. SAVE ATTRIBUTE VALUES 37
7.5 S.M.A.R.T. EXECUTE OFF-LINE IMMEDIATE 37
7.6 S.M.A.R.T. READ DATA 37
8 PACKAGE MECHANICAL 40
DECLARATION OF CONFORMITY 42
9 ROHS AND WEEE UPDATE FROM SWISSBIT 43
10 PART NUMBER DECODER 45
10.1 MANUFACTURER 45
10.2 MEMORY TYPE 45
10.3 PRODUCT TYPE 45
10.4 DENSITY 45
10.5 PLATFORM 45
10.6 PRODUCT GENERATION 45
10.7 MEMORY ORGANIZATION 45
10.8 TECHNOLOGY 45
10.9 NUMBER OF FLASH CHIP 45
10.10 FLASH CODE 45
10.11 TEMP. OPTION 46
10.12 DIE CLASSIFICATION 46
10.13 PIN MODE 46
10.14 DRIVE CONFIGURATION XYZ 46
10.15 OPTION 46
11 SWISSBIT MSATA SSD MARKING SPECIFICATION 47
11.1 TOP VIEW 47
12 REVISION HISTORY 48

3 Order Information

3.1 Available Standard part numbers

FIX / SATA II/ PIO4, MDMA2, UDMA6

Density	Part Number
2GB	SFSA2048UxBR2TO-t-MS-2y6-STD
4GB	SFSA4096UxBR4TO-t-MS-2y6-STD
8GB	SFSA8192UxBR4TO-t-DT-2y6-STD
16GB	SFSA16GBUxBR4TO-t-QT-2y6-STD
32GB	SFSA32GBUxBR4TO-t-NC-2y6-STD
64GB	SFSA64GBUxBR4MT-t-QT-2y6-STD

Table 1: Standard product list

x= depends on product generation;
y= depends on FW revision
t= C commercial temperature; =I industrial temperature

4 Product Specification

The Solid State Drive (SSD) is a small form factor 50.8mm x 29.85 mm x 3.3mm) non-volatile memory drive which provides high capacity data storage. The SSDs are designed after the JEDEC MO-300 full size standard. It has a standard combined connector with SATA and power/control part. The connector is mechanical identical with eeePC card connector, but has different pinout. The card works at a supply voltage of 3.3V.
The drive with the SATA interface operates in Mode 2.0 (1.5 or 3.0 Gb/s burst).
The drive has an internal **intelligent controller** which manages interface protocols, data storage and retrieval as well as hardware BCH-code **Error Correction Code (ECC)**, **defect handling, diagnostics and clock control**.
The **wear leveling** mechanism assures an equal usage of the Flash memory cells to extend the life time.
The hardware BCH-code ECC allows to detect and correct **8 random bits per 528 Bytes**.
The drive has a **voltage detector** and a powerful **power-loss management feature** to prevent data corruption after power-down.
The specification has been realized and approved by the ATA/ATAPI-7 specification.
The system highlights are shown in Table 2 ...Table 8.

Related Documentation

- Serial Transport Protocols and Physical Interconnect (ATA/ATAPI-7)
- AT Attachment Interface Document, American National Standards Institute, X3.221-1994
- JEDEC MO-300 full size standard

4.1 Physical description

The SSD contains a flash controller and Flash memory modules. The controller interfaces with a host system allowing data to be written to and read from the Flash memory modules.
The SSD has a PCIe mini connector with SATA interface. Figure 1 and Figure 2 (page 40) show SSD dimensions and connector location.

4.2 System Performance

Table 2: System Performance (measured) UDMA5

System Performance		Typ.	Max.	Unit
Data transfer Rate (SATA burst (1.5 or 3.0Gb/s))		150 or 300	300	MB/s
Sustained Sequential Read 128kB Block size	2GB (2ch)	56 (1)	60	
	4GB	100 (1)	110	
	8...16GB	110 (1)	120	
	32GB	93 (1)	100	
	64GB	98 (1)	110	
Sustained Sequential Write 128kB Block size	2GB (2ch)	25 (1)	26	
	4GB	46 (1)	47	
	8...16GB	87 (1)	95	
	32GB	76 (1)	90	
	64GB	88 (1)	92	
Sustained Sequential Read 4kB Block size	2GB	24 (1)	25	MB/s
	4GB	27 (1)	28	
	8...16GB	28 (1)	30	
	32GB	25 (1)	28	
	64GB	16 (1)	20	
Sustained Sequential Write 4kB Block size	2GB (2ch)	17 (1)	18	
	4GB	20 (1)	22	
	8...16GB	21 (1)	23	
	32GB	19 (1)	21	
	64GB	11 (1)	16	
Sustained Random Read 4kB Block size	2GB (2ch)	11 (1)	12	MB/s
	4...8GB	11 (1)	12	
	16GB	9 (1)	11	
	8...16GB	6 (1)	8	
	32GB	5.5 (1)	7	
	64GB	4 (1)	7	
Sustained Random Write 4kB Block size	2GB (2ch)	0.07 (1)(2)	0.10	
	4GB	0.06 (1)(2)	0.09	
	8...16GB	0.05 (1)(2)	0.08	
	32GB	0.05 (1)(2)	0.08	
	64GB	0.01 (1)(2)	0.05	

1. All values refer to Toshiba or Micron Flash chips (see part number) in UDMA5 mode (SATA 3.0Gbit/s) with Sequential write/read test (256 sectors multiple commands) and sequential and random write/read test (8 sectors multiple commands). Sustained Speed depends on flash type and number, file/cluster size, and burst speed.
2. The typical random write speed values are really random access across the whole drive. Random write values in file systems are much larger.

4.3 Environmental Specifications

4.3.1 Recommended Operating Conditions

Parameter	Value
Commercial Operating Temperature	0°C to 70°C
Industrial Operating Temperature	-40°C to 85°C
Power Supply VCC Voltage	3.3V ±5%

Table 3: Current consumption (1)

Current Consumption (type)	3.3V	Unit
Write (typ/max)	400/490	mA
Read (typ/max)	280/400	
Sleep/Idle Mode (typ/max)	180/200	

1. All values are typical at 25° C and nominal supply voltage and refer to SATAII performance test random pattern for a 64GByte SSD.

4.3.2 Recommended Storage Conditions

Table 4: Recommended Storage Conditions

Parameter	Value
Commercial Storage Temperature	-50°C to 100°C
Industrial Storage Temperature	-50°C to 100°C

4.3.3 Shock, Vibration, and Humidity

Table 5: Shock, Vibration, and Humidity

Parameter	Value
Humidity (non-condensing)	85% RH 85°C, 1000 hrs (JEDEC JESD22, method A101-B)
Vibration	20G Peak, 10...2000Hz
Shock	1500G, 0.5ms duration, half sine wave

4.4 Physical Dimensions

Table 6: Physical Dimensions

Physical Dimensions		Unit
Length	50.8±0.15	mm
Width	29.85±0.15	
Thickness	max 3.3	
Weight (typ.)	7	g

4.5 Reliability

Table 7: System Reliability and Maintenance (1)

Parameter	Value
MTBF (at 25°C)	> 2,500,000 hours
Data Reliability	< 1 Non-Recoverable Error per 10^{14} bits Read
Data Retention	10 years (JESD47)

1. Dependent on final system qualification data.

4.6 Drive geometry / CHS parameter

Table 8: SSD capacity specification

Capacity	Default_cylinders	Default_heads	Default_sectors	Sectors_drive	Total addressable Bytes
2GB	3,886	16	63	3,896,928	1,995,227,136
4GB	7,732	16	63	7,793,856	3,990,454,272
8GB	15,498	16	63	15,621,984	7,998,455,808
16GB	16,383*)	16	63	31,277,056	16,013,852,672
32GB	16,383*)	16	63	62,586,880	32,044,482,560
64GB	16383*)	16	63	125'313'024	64'160'268'288

*) The CHS access is limited to about 8GB. Above 8GB the drive must be addressed in LBA mode.

5 Electrical interface

5.1 Electrical description

The Mini-SATA connector is the same as the miniPCIE and eeePC card connector, **but the pinout is different.**

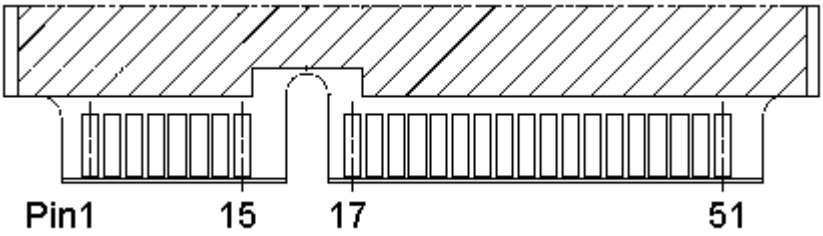

Table 9: Pin Assignment, name, and description

Description	Assignment	Pin	Pin	Assignment	Description
No Connect	N/A	1	2	+3.3V	3.3V Source
No Connect	N/A	3	4	GND	Return Current Path
No Connect	N/A	5	6	+1.5V	No Connect
No Connect	N/A	7	8	N/A	No Connect
Return Current Path	GND	9	10	N/A	No Connect
No Connect	N/A	11	12	N/A	No Connect
No Connect	N/A	13	14	N/A	No Connect
Return Current Path	GND	15	16	N/A	No Connect
No Connect	N/A	17	18	GND	Return Current Path
No Connect	N/A	19	20	N/A	No Connect
Return Current Path	GND	21	22	N/A	No Connect
+ SATA differential transmit signal	B+	23	24	3.3V	3.3V Source
- SATA differential transmit signal	B-	25	26	GND	Return Current Path
Return Current Path	GND	27	28	1.5V	No Connect
Return Current Path	GND	29	30	N/A	No Connect
- SATA differential receive signal	A-	31	32	N/A	No Connect
+ SATA differential receive signal	A+	33	34	GND	Return Current Path
Return Current Path	GND	35	36	N/A	No Connect
Return Current Path	GND	37	38	N/A	No Connect
3.3V Source	3.3V	39	40	GND	Return Current Path
3.3V Source	3.3V	41	42	N/A	No Connect
Return Current Path	GND	43	44	N/A	No Connect
No Connect	Reserved	45	46	N/A	No Connect
No Connect	Reserved	47	48	+1.5V	No Connect
Device activity / LED (optional) *)	DA	49	50	N/A	optional Return Current Path**)
Pulled to GND by Device	Presence detection	51	52	3.3V	3.3V Source

*) Device Activity Pin is low in idle mode and high (flickering) during data transfer.
It can be optional disconnected on the module or the pin can configured without driving, only pull up resistor on request.
In firmware revision "1" (part number -216-STD) this pin is driven low and high If this pin is grounded by the host, a current goes through this pin.
In firmware "2" and higher this pin is only driven low as optional specified in the SATA-Specification "SerialATA_Revision_3_0_Gold"

**) In standard products pin50 is not connected on the SSD to prevent power short circuit if connected to an eeePC card connector, but could be optional connected to GND

5.2 Electrical Specification

Table 10 defines the DC Characteristics of the SSD. Unless otherwise stated, conditions are:

- Vcc = 3.3V ± 5%
- 0°C to +70°C

Table 10: Absolute Maximum Conditions

Parameter	Symbol	Conditions
Input Power	VCC	-0.3V to 3.6V

6 ATA command description

This section provides information on the ATA commands supported by the SSD. The commands are issued to the ATA by loading the required registers in the command block with the supplied parameter, and then writing the command code to the register.

ATA Command Flow

DDMAI0: DMA_in State	This state is activated when the device receives a DMA data-in command or the transmission of one or more data FIS is required to complete the command. When in this state, the device shall prepare the data for transfer of a data FIS to the host.
Transition DDMAI0:1	When the device has the data ready to transfer a data FIS, the device shall transition to the DDMAI1: Send_data state. Transition DDMAI0:2 When the device has transferred all of the data requested by this command or has encountered an error that causes the command to abort before completing the transfer of the requested data, then the device shall transition to the DDMAI2: Send_status state.
DDMAI1: Send_data	This state is activated when the device has the data ready to transfer a data FIS to the host. When in this state, the device shall request that the Transport layer transmit a data FIS containing the data. The device command layer shall request a Data FIS size of no more than 2,048 Dwords (8KB).
Transition DDMAI1:1	When the data FIS has been transferred, the device shall transition to the DMA0I0: DMA_in state.
DDMAI2: Send_status	This state is activated when the device has transferred all of the data requested by the command or has encountered an error that causes the command to abort before completing the transfer of the requested data. When in this state, the device shall request that the Transport layer transmit a Register FIS with the register content as described in the command description in the ATA/ATAPI-6 standard and the I bit set to one.
Transition DDMAI2:1	When the FIS has been transmitted, the device shall transition to the DI0: Device_idle state.

For reasons of backward compatibility some commands are implemented as 'no operation' NOP.
Table 11 summarizes the Drive command set with the paragraphs that follow describing the individual commands and the task file for each.

Table 11: ATA Command Set[1]

Command	Code	FR	SC	SN	CY	DH	LBA
Check Power Mode	E5h or 98h					D	
Erase Sector(s) (CFA)	C0h		Y	Y	Y	Y	Y
Execute Drive Diagnostic	90h					D	
Flush cache	E7h					D	
Identify Drive	ECh					D	
Idle	E3h or 97h		Y			D	
Idle Immediate	E1h or 95h					D	
NOP	00h					D	
Read Buffer	E4h					D	
Read DMA	C8		Y	Y	Y	Y	Y
Read Multiple	C4h		Y	Y	Y	Y	Y
Read native max address	F8h					D	
Read Sector(s)	20h		Y	Y	Y	Y	Y
Read Verify Sector(s)	40h or 41h		Y	Y	Y	Y	Y
Request Sense (CFA)	03h					D	
Security Disable Password	F6h					D	
Security Erase Prepare	F3h					D	
Security Erase Unit	F4h					D	
Security Freeze Lock	F5h					D	
Security Set Password	F1h					D	
Security Unlock	F2h					D	
Set Features	EFh	Y				D	
Set max address (with set password)	F9h		Y	Y	Y	Y	Y
Set Multiple Mode	C6h		Y			D	
Sleep	E6h or 99h					D	
S.M.A.R.T.	B0h	Y	Y		Y	D	
Standby	E2h or 96h					D	
Standby Immediate	E0h or 94h					D	
Translate Sector (CFA)	87h		Y	Y	Y	Y	Y
Write Buffer	E8h					D	
Write DMA	CA		Y	Y	Y	Y	Y
Write Multiple	C5h		Y	Y	Y	Y	Y
Write Multiple w/o Erase (CFA)	CDh		Y	Y	Y	Y	Y
Write Sector(s)	30h		Y	Y	Y	Y	Y
Write Sector(s) w/o Erase (CFA)	38h		Y	Y	Y	Y	Y

1. FR = Features Register, SC = Sector Count Register, SN = Sector Number Register, CY = Cylinder Registers, DH = Drive/Head Register, LBA = Logical Block Address Mode Supported (see command descriptions for use), Y – The register contains a valid parameter for this command. For the Drive/Head Register Y means both the Drive and head parameters are used.
D – only the Drive parameter is valid and not the head parameter C – the register contains command specific data (see command descriptors for use).

6.1 Check Power Mode (98h or E5h)

This command checks the power mode.
Issuing the command while the Drive is in Standby mode, is about to enter Standby, or is exiting Standby, the command will set BSY, set the Sector Count Register to 00h, clear BSY and generate an interrupt.
Issuing the command when the Drive is in Idle mode will set BSY, set the Sector Count Register to FFh, clear BSY and generate an interrupt.
Table 12 defines the Byte sequence of the Check Power Mode command.

Table 12: Check Power Mode

Task File Register	7	6	5	4	3	2	1	0
COMMAND	98h or E5h							
DRIVE/HEAD	nu	nu	nu	D	nu			
CYLINDER HI	nu							
CYLINDER LOW	nu							
SECTOR NUM	nu							
SECTOR COUNT	nu							
FEATURES	nu							

6.2 Erase Sector(s) (C0h)

This command is used to pre-erase and condition data sectors prior to a Write Sector without Erase command or a Write Multiple Without Erase command. There is no data transfer associated with this command but a Write Fault error status can occur. Table 13 defines the Byte sequence of the Erase Sector command.

Table 13: Erase Sector(s)

Task File Register	7	6	5	4	3	2	1	0
COMMAND	C0h							
DRIVE/HEAD	nu	L	nu	D	H[3:0] or LBA[27:24] of the starting sector/LBA			
CYLINDER HI	Cylinder[15:8] or LBA[23:16] of the first sector/LBA to erase							
CYLINDER LOW	Cylinder[7:0] or LBA[15:8] of the first sector/LBA to erase							
SECTOR NUM	Sector[7:0] or LBA[7:0] of the first sector/LBA to erase							
SECTOR COUNT	The number of sectors/logical blocks to erase							
FEATURES	nu							

6.3 Execute Drive Diagnostic (90h)

This command performs the internal diagnostic tests implemented by the Drive.
The Drive bit is ignored and the diagnostic command is executed by both the Master and the Slave with the Master responding with the status for both devices.
Table 14 defines the Execute Drive Diagnostic command Byte sequence. The Diagnostic codes shown in Table 15 are returned in the Error Register at the end of the command.

Table 14: Execute Drive Diagnostic

Task File Register	7	6	5	4	3	2	1	0
COMMAND	90h							
DRIVE/HEAD	nu	nu	nu	D	nu			
CYLINDER HI	nu							
CYLINDER LOW	nu							
SECTOR NUM	nu							
SECTOR COUNT	nu							
FEATURES	nu							

Table 15: Diagnostic Codes

Code	Error Type
01h	No Error Detected
02h	Formatter Device Error
03h	Sector Buffer Error
04h	ECC Circuitry Error
05h	Controlling Microprocessor Error

6.4 Flush Cache (E7h)

This command causes the drive to complete writing data from its cache. The drive returns status with RDY=1 and DSC=1 after the data in the write cache buffer is written to the media. If the drive does not support the Flush Cache command, the drive shall return command aborted.

Table 16: Flush Cache

Task File Register	7	6	5	4	3	2	1	0
COMMAND	E7h							
DRIVE/HEAD	nu	nu	nu	D	nu			
CYLINDER HI	nu							
CYLINDER LOW	nu							
SECTOR NUM	nu							
SECTOR COUNT	nu							
FEATURES	nu							

6.5 Identify Device (ECh)

The Identify Device command enables the host to receive parameter information from the Drive. This command has the same protocol as the Read Sector(s) command. Table 17 defines the Identify Device command Byte sequence. All reserved bits or Words are zero.
Table 18 shows the definition of each field in the Identify Drive Information.

Table 17: Identify Device

Task File Register	7	6	5	4	3	2	1	0
COMMAND	ECh							
DRIVE/HEAD	nu	nu	nu	D	nu			
CYLINDER HI	nu							
CYLINDER LOW	nu							
SECTOR NUM	nu							
SECTOR COUNT	nu							
FEATURES	nu							

Table 18: Identify Device Information

Word Address	Default Value	Total Bytes	Data Field Type Information
0	**044Ah***	2	Standard Configuration FIX (optional 848Ah for removable)
1	XXXXh	2	Default number of cylinders (obsolete)
2	0000h	2	Reserved
3	00XXh	2	Default number of heads (obsolete)
4	0000h	2	Obsolete
5	XXXXh	2	Obsolete
6	XXXXh	2	Default number of sectors per track (obsolete)
7-8	XXXXh	4	Number of sectors per Drive (Word 7 = MSW, Word 8 = LSW)
9	0000h	2	Obsolete
10-19	aaaa	20	Serial number in ASCII (right justified)
20	0002h	2	Buffer type (dual ported multi-sector) retired
21	0002h*	2	Buffer Size in 512byte increment (obsolete)
22	000Xh	2	Reserved
23-26	**YYYY***	8	Firmware revision in ASCII. Big Endian Byte Order in Word
27-46	**YYYY***	40	Model number in ASCII (right justified ("SFSAxxxxUxBRxxx-x-xx-xxx-xxx")
47	8001h	2	Maximum number of sectors on Read/Write Multiple command
48	0000h	2	Double word not supported
49	**0F00h*** **0E00h***	2	Capabilities with DMA, LBA, IORDY supported without DMA LBA, IORDY supported
50	4000h	2	Capabilities
51	0200h	2	PIO data transfer cycle timing mode 2
52	0000h	2	Obsolete
53	**0007h***	2	Field validity (Bytes 54-58, 64-70, 88)
54	XXXXh	2	Current numbers of cylinders (obsolete)
55	XXXXh	2	Current numbers of heads (obsolete)
56	XXXXh	2	Current sectors per track (obsolete)
57-58	XXXXh	4	Current capacity in sectors (LBAs)(Word 57 = LSW, Word 58 = MSW) (obsolete)
59	010Xh*	2	Multiple sector setting (can be changed by host).
60-61	XXXXh	4	Total number of sectors addressable in LBA Mode
62	0000h	2	Obsolete
63	**0007h*** **0000h***	2	Multi-Word DMA transfer support and selection (can be changed by host). no multi-word DMA
64	0003h	2	Advanced PIO modes 3 and 4 supported
65	0078h*	2	Minimum Multi-Word DMA transfer cycle time per Word.
66	0078h*	2	Recommended Multi-Word DMA transfer cycle time.
67	0078h*	2	Minimum PIO transfer cycle time without flow control
68	0078h*	2	Minimum PIO transfer cycle time with IORDY flow control
69-75	0000h	14	Reserved
76	0006h	2	SATA Capabilities
77	0000h	2	Reserved
78	0008h	2	SATA Feature support
79	0000h*	2	SATA Features enabled (can be changed by host)
80-81	0080h 0000h	4	ATA/ATAPI version 7
82 -84	742Bh* 5500h* 4002h*	6	Features/command sets supported
85-87	7429h* 1400h* 4002h*	6	Features/command sets enabled (can change in operation)
88	**207F***	2	UDMA Mode Supported 0,1,2,3,4,5,6 and Selected 5 (changes in operation)
89	0003*	2	Time for security erase unit completion (e.g. 6 minutes)
90-91	0000h*	4	Reserved
92	**FFFE***	2	Master Password Revision Code
93-127	0000h*	70	Reserved
128	0001h*	2	Security Status (changes in operation)
129-159	XXXXh	62	Vendor specific (e.g."Swissbit SSD")
160	0000h*	2	Max. current
161-216	0000h	112	Reserved
217	0001h*	2	Nominal Media Rotation Rate: Solid State Device
218-255	0000h	76	Reserved

* Standard values for full functionality, depending on configuration
XXXX Depending on drive capacity and drive geometry
YYYY Depending on drive configuration

6.5.1 Word 0: General Configuration

This field indicates the general characteristics of the device.
The default value for Word 0 is set to **045Ah**.
Some operating systems require Bit 6 of Word 0 to be set to '1' (Non-removable device) to use the drive as the root storage device.

6.5.2 Word 1: Default Number of Cylinders

This field contains the number of translated cylinders in the default translation mode. This value will be the same as the number of cylinders.

6.5.3 Word 3: Default Number of Heads

This field contains the number of translated heads in the default translation mode.

6.5.4 Word 6: Default Number of Sectors per Track

This field contains the number of sectors per track in the default translation mode.

6.5.5 Word 7-8: Number of Sectors per Drive

This field contains the number of sectors per Drive. This double Word value is also the first invalid address in LBA translation mode.

6.5.6 Word 10-19: Memory Drive Serial Number

The contents of this field are right justified and padded without spaces (20h).

6.5.7 Word 23-26: Firmware Revision

This field contains the revision of the firmware for this product.

6.5.8 Word 27-46: Model Number

This field contains the model number for this product and is left justified and padded with spaces (20h).

6.5.9 Word 47: Read/Write Multiple Sector Count

This field contains the maximum number of sectors that can be read or written per interrupt using the Read Multiple or Write Multiple commands.

6.5.10 Word 49: Capabilities

- Bit 13 Standby Timer: is set to '0' to indicate that the Standby timer operation is defined by the manufacturer.
- Bit 11: IORDY Supported
  If bit 11 is set to 1 then this drive supports IORDY operation.
  If bit 11 is set to 0 then this drive may support IORDY operation.
- Bit 10: IORDY may be disabled
  If bit 10 is set to 1 then IODRDY may be disabled.
- Bit 9 LBA support: drive support LBA mode addressing.
- Bit 8 DMA Support: Read/Write DMA commands are supported.

6.5.11 Word 51: PIO Data Transfer Cycle Timing Mode

This field defines the mode for PIO data transfer. For backward compatibility with BIOSs written before Word 64 was defined for advanced modes, a device reports in Word 51, the highest original PIO mode it can support (PIO mode 0, 1 or 2). Bits 15-8: are set to 02H.

6.5.12 Word 53: Translation Parameter Valid

- Bit 0: is set to '1' to indicate that Words 54 to 58 are valid
- Bit 1: is set to '1' to indicate that Words 64 to 70 are valid
- Bit 2 shall be set to 1 indicating that word 88 is valid and reflects the supported UDMA

6.5.13 Word 54-56: Current Number of Cylinders, Heads, Sectors/Track

These fields contain the current number of user addressable Cylinders, Heads, and Sectors/Track in the current translation mode.

6.5.14 Word 57-58: Current Capacity

This field contains the product of the current cylinders, heads and sectors.

6.5.15 Word 59: Multiple Sector Setting

- Bits 15-9 are reserved and must be set to '0'.
- Bit 8 is set to '1', to indicate that the Multiple Sector Setting is valid.
- Bits 7-0 are the current setting for the number of sectors to be transferred for every interrupt, on Read/Write Multiple commands; the only values returned are '00h' or '01h'.

6.5.16 Word 60-61: Total Sectors Addressable in LBA Mode

This field contains the number of sectors addressable for the Drive in LBA mode only.

6.5.17 Word 63: Multi-Word DMA transfer

Bits 15 through 8 of word 63 of the Identify Device parameter information is defined as the Multiword DMA mode selected field. If this field is supported, bit 1 of word 53 shall be set to one. This field is bit significant. Only one of bits may be set to one in this field by the drive to indicate the multiword DMA mode which is currently selected.
Of these bits, bits 15 through 11 are reserved. Bit 8, if set to one, indicates that Multiword DMA mode 0 has been selected. Bit 9, if set to one, indicates that Multiword DMA mode 1 has been selected. Bit 10, if set to one, indicates that Multiword DMA mode 2 has been selected.
Selection of Multiword DMA modes 3 and above are specific to Drive are as described in Word 163.
Bits 7 through 0 of word 63 of the Identify Device parameter information is defined as the Multiword DMA data transfer supported field. If this field is supported, bit 1 of word 53 shall be set to one. This field is bit significant. Any number of bits may be set to one in this field by the drive to indicate the Multiword DMA modes it is capable of supporting.
Of these bits, bits 7 through 2 are reserved. Bit 0, if set to one, indicates that the drive supports Multiword DMA mode 0. Bit 1, if set to one, indicates that the drive supports Multiword DMA modes 1 and 0. Bit 2, if set to one, indicates that the Drive supports Multiword DMA modes 2, 1 and 0.
Support for Multiword DMA modes 3 and above are specific to Drive are reported in word 163 as described in Word 163.

6.5.18 Word 64: Advanced PIO transfer modes supported

This field is bit significant. Any number of bits may be set to '1' in this field by the drive to indicate the advanced PIO modes it is capable of supporting.

- Bits 7-2 are reserved for future advanced PIO modes.
- Bit 1 is set to '1', indicates that the Drive supports PIO mode 4.
- Bit 0 is set to '1' to indicate that the Drive supports PIO mode 3.

Support for PIO modes 5 and above are specific to Drive are reported in word 163 as described in Word 163.

6.5.19 Word 65: Minimum Multi-Word DMA transfer cycle time

Word 65 of the parameter information of the Identify Device command is defined as the minimum Multiword DMA transfer cycle time. This field defines, in nanoseconds, the minimum cycle time that, if used by the host, the Drive guarantees data integrity during the transfer.
If this field is supported, bit 1 of word 53 shall be set to one. The value in word 65 shall not be less than the minimum cycle time for the fastest DMA mode supported by the device. This field shall be supported by all Drives supporting DMA modes 1 and above. If bit 1 of word 53 is set to one, but this field is not supported, the Drive shall return a value of zero in this field.

6.5.20 Word 66: Recommended Multi-Word DMA transfer cycle time

Word 66 of the parameter information of the Identify Device command is defined as the recommended Multiword DMA transfer cycle time. This field defines, in nanoseconds, the cycle time that, if used by the host, may optimize the data transfer from by reducing the probability that the Drive will need to negate the DMARQ signal during the transfer of a sector.

If this field is supported, bit 1 of word 53 shall be set to one. The value in word 66 shall not be less than the value in word 65. This field shall be supported by all Drives supporting DMA modes 1 and above. If bit 1 of word 53 is set to one, but this field is not supported, the Drive shall return a value of zero in this field.

6.5.21 Word 67: Minimum PIO transfer cycle time without flow control

Word 67 of the parameter information of the Identify Device command is defined as the minimum PIO transfer without flow control cycle time. This field defines, in nanoseconds, the minimum cycle time that, if used by the host, the Drive guarantees data integrity during the transfer without utilization of flow control.
If this field is supported, Bit 1 of word 53 shall be set to one.
Any Drive that supports PIO mode 3 or above shall support this field, and the value in word 67 shall not be less than the value reported in word 68.
If bit 1 of word 53 is set to one because a Drive supports a field in words 64-70 other than this field and the Drive does not support this field, the Drive shall return a value of zero in this field.

6.5.22 Word 68: Minimum PIO transfer cycle time with IORDY

Word 68 of the parameter information of the Identify Device command is defined as the minimum PIO transfer with IORDY flow control cycle time. This field defines, in nanoseconds, the minimum cycle time that the Drive supports while performing data transfers while utilizing IORDY flow control.
If this field is supported, Bit 1 of word 53 shall be set to one.
Any Drive that supports PIO mode 3 or above shall support this field, and the value in word 68 shall be the fastest defined PIO mode supported by the Drive.
If bit 1 of word 53 is set to one because a Drive supports a field in words 64-70 other than this field and the Drive does not support this field, the Drive shall return a value of zero in this field.

6.5.23 Word 76: Serial ATA Capabilities

- Bit 15:11 Reserved
- Bit 10 1 = Supports Phy Event Counters
- Bit 9 1 = Supports receipt of host initiated power management requests
- Bit 8 1 = Supports native Command Queuing
- Bit 7:3 Reserved for future SATA signaling speed grades
- Bit 2 1 = Supports SATA Gen2 Signaling Speed (3.0Gb/s)
- Bit 1 1 = Supports SATA Gen1 Signaling Speed (1.5Gb/s)
- Bit 0 Shall be cleared to zero

6.5.24 Word 78: SATA Feature support

- Bit 15-7 Reserved
- Bit 6 1 = Supports software settings preservation
- Bit 5 1 = Supports asynchronous notification
- Bit 4 1 = Supports in-order data delivery
- Bit 3 1 = Device supports initiating interface power management
- Bit 2 1 = Supports DMA Setup Auto-Activate optimization
- Bit 1 1 = Supports non-zero buffer offsets
- Bit 0 Shall be cleared to zero

6.5.25 Word 79: SATA Features enabled

- Bit 15-7 Reserved
- Bit 6 1 = Supports software settings preservation enabled
- Bit 5 1 = Supports asynchronous notification enabled
- Bit 4 1 = Supports in-order data delivery enabled
- Bit 3 1 = Device supports initiating interface power management enabled
- Bit 2 1 = Supports DMA Setup Auto-Activate optimization enabled
- Bit 1 1 = Supports non-zero buffer offsets enabled
- Bit 0 Shall be cleared to zero

6.5.26 Words 82-84: Features/command sets supported

Words 82, 83, and 84 shall indicate features/command sets supported. The value 0000h or FFFFh was placed in each of these words by Drives prior to ATA-3 and shall be interpreted by the host as meaning that features/command sets supported are not indicated. Bits 1 through 13 of word 83 and bits 0 through 13 of word 84 are reserved. Bit 14 of word 83 and word 84 shall be set to one and bit 15 of word 83 and word 84 shall be cleared to zero to provide indication that the features/command sets supported words are valid. The values in these words should not be depended on by host implementers.

- Bit 0 of word 82 shall be set to zero; the SMART feature set is not supported.
- If bit 1 of word 82 is set to one, the Security Mode feature set is supported.
- Bit 2 of word 82 shall be set to zero; the Removable Media feature set is not supported.
- Bit 3 of word 82 shall be set to one; the Power Management feature set is supported.
- Bit 4 of word 82 shall be set to zero; the Packet Command feature set is not supported.
- If bit 5 of word 82 is set to one, write cache is supported.
- If bit 6 of word 82 is set to one, look-ahead is supported.
- Bit 7 of word 82 shall be set to zero; release interrupt is not supported.
- Bit 8 of word 82 shall be set to zero; Service interrupt is not supported.
- Bit 9 of word 82 shall be set to zero; the Device Reset command is not supported.
- Bit 10 of word 82 shall be set to zero; the Host Protected Area feature set is not supported.
- Bit 11 of word 82 is obsolete.
- Bit 12 of word 82 shall be set to one; the Drive supports the Write Buffer command.
- Bit 13 of word 82 shall be set to one; the Drive supports the Read Buffer command.
- Bit 14 of word 82 shall be set to one; the Drive supports the NOP command.
- Bit 15 of word 82 is obsolete.

- Bit 0 of word 83 shall be set to zero; the Drive does not support the Download Microcode command.
- Bit 1 of word 83 shall be set to zero; the Drive does not support the Read DMA Queued and Write DMA Queued commands.
- Bit 2 of word 83 shall be set to zero; the Drive does not support the CFA feature set.
- If bit 3 of word 83 is set to one, the Drive supports the Advanced Power Management feature set.
- Bit 4 of word 83 shall be set to zero; the Drive does not support the Removable Media Status feature set.

6.5.27 Words 85-87: Features/command sets enabled

Words 85, 86, and 87 shall indicate features/command sets enabled. The value 0000h or FFFFh was placed in each of these words by Drives prior to ATA-4 and shall be interpreted by the host as meaning that features/command sets enabled are not indicated. Bits 1 through 15 of word 86 are reserved. Bits 0-13 of word 87 are reserved. Bit 14 of word 87 shall be set to one and bit 15 of word 87 shall be cleared to zero to provide indication that the features/command sets enabled words are valid. The values in these words should not be depended on by host implementers.

- Bit 0 of word 85 shall be set to zero; the SMART feature set is not enabled.
- If bit 1 of word 85 is set to one, the Security Mode feature set has been enabled via the Security
- Set Password command.
- Bit 2 of word 85 shall be set to zero; the Removable Media feature set is not supported.
- Bit 3 of word 85 shall be set to one; the Power Management feature set is supported.
- Bit 4 of word 85 shall be set to zero; the Packet Command feature set is not enabled.
- If bit 5 of word 85 is set to one, write cache is enabled.
- If bit 6 of word 85 is set to one, look-ahead is enabled.
- Bit 7 of word 85 shall be set to zero; release interrupt is not enabled.
- Bit 8 of word 85 shall be set to zero; Service interrupt is not enabled.
- Bit 9 of word 85 shall be set to zero; the Device Reset command is not supported.
- Bit 10 of word 85 shall be set to zero; the Host Protected Area feature set is not supported.
- Bit 11 of word 85 is obsolete.
- Bit 12 of word 85 shall be set to one; the Drive supports the Write Buffer command.
- Bit 13 of word 85 shall be set to one; the Drive supports the Read Buffer command.
- Bit 14 of word 85 shall be set to one; the Drive supports the NOP command.
- Bit 15 of word 85 is obsolete.
- Bit 0 of word 86 shall be set to zero; the Drive does not support the Download Microcode command.
- Bit 1 of word 86 shall be set to zero; the Drive does not support the Read DMA Queued and Write DMA Queued commands.

- If bit 2 of word 86 shall be set to zero, the Drive does not support the CFA feature set.
- If bit 3 of word 86 is set to one, the Advanced Power Management feature set has been enabled via the Set Features command.
- Bit 4 of word 86 shall be set to zero; the Drive does not support the Removable Media Status feature set.

6.5.28 Word 88: Ultra DMA Modes Supported and Selected

Word 88 identifies the Ultra DMA transfer modes supported by the device and indicates the mode that is currently selected. Only one DMA mode shall be selected at any given time. If an Ultra DMA mode is selected, then no Multiword DMA mode shall be selected. If a Multiword DMA mode is selected, then no Ultra DMA mode shall be selected. Support of this word is mandatory if Ultra DMA is supported. Word 88 shall return a value of 0 if the device does not support UDMA.

- Bit 15: Reserved
- Bit 14: 1 = Ultra DMA mode 6 is selected 0 = Ultra DMA mode 6 is not selected
- Bit 13: 1 = Ultra DMA mode 5 is selected 0 = Ultra DMA mode 5 is not selected
- Bit 12: 1 = Ultra DMA mode 4 is selected 0 = Ultra DMA mode 4 is not selected
- Bit 11: 1 = Ultra DMA mode 3 is selected 0 = Ultra DMA mode 3 is not selected
- Bit 10: 1 = Ultra DMA mode 2 is selected 0 = Ultra DMA mode 2 is not selected
- Bit 9: 1 = Ultra DMA mode 1 is selected 0 = Ultra DMA mode 1 is not selected
- Bit 8: 1 = Ultra DMA mode 0 is selected 0 = Ultra DMA mode 0 is not selected
- Bit 7: Reserved
- Bit 6: 1 = Ultra DMA mode 6 and below are supported. Bits 0-5 shall be set to 1.
- Bit 5: 1 = Ultra DMA mode 5 and below are supported. Bits 0-4 shall be set to 1.
- Bit 4: 1 = Ultra DMA mode 4 and below are supported. Bits 0-3 shall be set to 1.
- Bit 3: 1 = Ultra DMA mode 3 and below are supported, Bits 0-2 shall be set to 1.
- Bit 2: 1 = Ultra DMA mode 2 and below are supported. Bits 0-1 shall be set to 1.
- Bit 1: 1 = Ultra DMA mode 1 and below are supported. Bit 0 shall be set to 1.
- Bit 0: 1 = Ultra DMA mode 0 is supported

6.5.29 Word 89: Time required for Security erase unit completion

Word 89 specifies the time required for the SECURITY ERASE UNIT command to complete. Support of this word is mandatory if the Security feature set is supported.
Required Time= (Value*2) minutes

6.5.30 Word 92: Master Password Revision Code

Word 92 contains the value of the Master Password Revision Code set when the Master Password was last changed. Valid values are 0001h through FFFEh. A value of 0000h or FFFFh indicates that the Master Password Revision is not supported. Support of this word is mandatory if the Security feature set is supported.

6.5.31 Word 128: Security status

Support of this word is mandatory if the Security feature set is supported.
Bit 8 of word 128 indicates the security level. If security mode is enabled and the security level is high, bit 8 shall be cleared to zero. If security mode is enabled and the security level is maximum, bit 8 shall be set to one. When security mode is disabled, bit 8 shall be cleared to zero.
Bit 5 of word 128 indicates the Enhanced security erase unit feature is supported. If bit 5 is set to one, the Enhanced security erase unit feature set is supported.
Bit 4 of word 128 indicates that the security count has expired. If bit 4 is set to one, the security count is expired and SECURITY UNLOCK and SECURITY ERASE UNIT are command aborted until a power-on reset or hardware reset.
Bit 3 of word 128 indicates security frozen. If bit 3 is set to one, the security is frozen.
Bit 2 of word 128 indicates security locked. If bit 2 is set to one, the security is locked.
Bit 1 of word 128 indicates security enabled. If bit 1 is set to one, the security is enabled.
Bit 0 of word 128 indicates the Security Mode feature set supported. If bit 0 is set to one, security is supported.

6.6 Idle (97h or E3h)

This command causes the Drive to set BSY, enter the Idle mode, clear BSY and generate an interrupt. If the sector count is non-zero, it is interpreted as a timer count (each count is 5ms) and the automatic power down mode is enabled. If the sector count is zero, the automatic power down mode is disabled. Note that this time base (5ms) is different from the ATA specification. Table 19 defines the Byte sequence of the Idle command.

Table 19: Idle

Task File Register	7	6	5	4	3	2	1	0
COMMAND	97h or E3h							
DRIVE/HEAD	nu	nu	nu	D	nu			
CYLINDER HI	nu							
CYLINDER LOW	nu							
SECTOR NUM	nu							
SECTOR COUNT	Timer Count (5ms increments)							
FEATURES	nu							

6.7 Idle Immediate (95h or E1h)

This command causes the Drive to set BSY, enter the Idle mode, clear BSY and generate an interrupt. Table 20 defines the Idle Immediate command Byte sequence.

Table 20: Idle Immediate

Task File Register	7	6	5	4	3	2	1	0
COMMAND	95h or E1h							
DRIVE/HEAD	nu	nu	nu	D	nu			
CYLINDER HI	nu							
CYLINDER LOW	nu							
SECTOR NUM	nu							
SECTOR COUNT	nu							
FEATURES	nu							

6.8 NOP (00h)

This command always fails with the Drive returning command aborted. Table 21 defines the Byte sequence of the NOP command.

Table 21: NOP

Task File Register	7	6	5	4	3	2	1	0
COMMAND	00h							
DRIVE/HEAD	nu	nu	nu	D	nu			
CYLINDER HI	nu							
CYLINDER LOW	nu							
SECTOR NUM	nu							
SECTOR COUNT	nu							
FEATURES	nu							

6.9 Read Buffer (E4h)

The Read Buffer command enables the host to read the current contents of the Drive's sector buffer. This command has the same protocol as the Read Sector(s) command. Table 22 defines the Read Buffer command Byte sequence.

Table 22: Read buffer

Task File Register	7	6	5	4	3	2	1	0
COMMAND	E4h							
DRIVE/HEAD	nu	nu	nu	D	nu			
CYLINDER HI	nu							
CYLINDER LOW	nu							
SECTOR NUM	nu							
SECTOR COUNT	nu							
FEATURES	nu							

6.10 Read DMA (C8h)

This command uses DMA mode to read from 1 to 256 sectors as specified in the Sector Count register. A sector count of 0 requests 256 sectors. The transfer begins at the sector specified in the Sector Number Register. When this command is issued the Drive sets BSY, puts all or part of the sector of data in the buffer. The Drive is then permitted, although not required, to set DRQ, clear BSY. The Drive asserts DMAREQ while data is available to be transferred. The Drive asserts DMAREQ while data is available to be transferred. The host then reads the (512 * sector-count) bytes of data from the Drive using DMA. While DMAREQ is asserted by the Drive, the Host asserts -DMACK while it is ready to transfer data by DMA and asserts -IORD once for each 16 bit word to be transferred to the Host.
Interrupts are not generated on every sector, but upon completion of the transfer of the entire number of sectors to be transferred or upon the occurrence of an unrecoverable error.
At command completion, the Command Block Registers contain the cylinder, head and sector number of the last sector read. If an error occurs, the read terminates at the sector where the error occurred. The Command Block Registers contain the cylinder, head, and sector number of the sector where the error occurred. The amount of data transferred is indeterminate.

Table 23: Read DMA

Task File Register	7	6	5	4	3	2	1	0
COMMAND	C8h							
DRIVE/HEAD	LBA			D	Head (LBA 27-24)			
CYLINDER HI	Cylinder High (LBA23-16)							
CYLINDER LOW	Cylinder Low (LBA15-8)							
SECTOR NUM	Sector Number (LBA7-0)							
SECTOR COUNT	Sector Count							
FEATURES	nu							

6.11 Read Multiple (C4h)

The Read Multiple command performs similarly to the Read Sectors command. Interrupts are not generated on every sector, but on the transfer of a block which contains the number of sectors defined by a Set Multiple command.
Command execution is identical to the Read Sectors operation except that the number of sectors defined by a Set Multiple command is transferred without intervening interrupts. DRQ qualification of the transfer is required only at the start of the data block, not on each sector.
The block count of sectors to be transferred without intervening interrupts is programmed by the Set Multiple Mode command, which must be executed prior to the Read Multiple command. When the Read Multiple command is issued, the Sector Count Register contains the number of sectors (not the number of blocks or the block count) requested. If the number of requested sectors is not evenly divisible by the block count, as many full blocks as possible are transferred, followed by a final, partial block transfer. The partial block transfer is for n sectors, where:
n = (sector count) module (block count).
If the Read Multiple command is attempted before the Set Multiple Mode command has been executed or when Read Multiple commands are disabled, the Read Multiple operation is rejected with an Aborted Command error.

Disk errors encountered during Read Multiple commands are posted at the beginning of the block or partial block transfer, but DRQ is still set and the data transfer will take place as it normally would, including transfer of corrupted data, if any.
Interrupts are generated when DRQ is set at the beginning of each block or partial block. The error reporting is the same as that on a Read Sector(s) Command. This command reads from 1 to 256 sectors as specified in the Sector Count register. A sector count of 0 requests 256 sectors. The transfer begins at the sector specified in the Sector Number Register.
If an error occurs, the read terminates at the sector where the error occurred. The Command Block Registers contain the cylinder, head and sector number of the sector where the error occurred. The flawed data are pending in the sector buffer.
Subsequent blocks or partial blocks are transferred only if the error was a correctable data error. All other errors cause the command to stop after transfer of the block which contained the error.

Table 24 defines the Read Multiple command Byte sequence.

Table 24: Read Multiple

Task File Register	7	6	5	4	3	2	1	0
COMMAND	C4h							
DRIVE/HEAD	1	LBA	1	D	Head (LBA 27-24)			
CYLINDER HI	Cylinder High (LBA23-16)							
CYLINDER LOW	Cylinder Low (LBA15-8)							
SECTOR NUM	Sector Number (LBA7-0)							
SECTOR COUNT	Sector Count							
FEATURES	nu							

6.12 Read Native max address (F8h)

The Read Native max address command reads the max native address of the drive. It is related to the Host protected Area feature set. Table 25 defines the Read max native address command Byte sequence.

Table 25: Read native max address

Task File Register	7	6	5	4	3	2	1	0
COMMAND	F8h							
DRIVE/HEAD	nu	LBA	nu	D	nu			
CYLINDER HI	nu							
CYLINDER LOW	nu							
SECTOR NUM	nu							
SECTOR COUNT	nu							
FEATURES	nu							

The LBA bit shall be set to one to specify the address is an LBA. DEV shall specify the selected device.
The native drive size is given in Drive/Head, Cyl Hi, Cyl Low and Sector num register as LBA value.

6.13 Read Sector(s) (20h)

This command reads from 1 to 256 sectors as specified in the Sector Count register. A sector count of 0 requests 256 sectors. The transfer begins at the sector specified in the Sector Number Register. When this command is issued and after each sector of data (except the last one) has been read by the host, the Drive sets BSY, puts the sector of data in the buffer, sets DRQ, clears BSY, and generates an interrupt. The host then reads the 512 Bytes of data from the buffer.
If an error occurs, the read terminates at the sector where the error occurred. The Command Block Registers contain the cylinder, head, and sector number of the sector where the error occurred. The flawed data are pending in the sector buffer. Table 26 defines the Read Sector command Byte sequence.

Table 26: Read sector(s)

Task File Register	7	6	5	4	3	2	1	0
COMMAND	20h							
DRIVE/HEAD	1	LBA	1	D	Head (LBA 27-24)			
CYLINDER HI	Cylinder High (LBA23-16)							
CYLINDER LOW	Cylinder Low (LBA15-8)							
SECTOR NUM	Sector Number (LBA7-0)							
SECTOR COUNT	Sector Count							
FEATURES	nu							

6.14 Read Verify Sector(s) (40h or 41h)

This command is identical to the Read Sectors command, except that DRQ is never set and no data is transferred to the host. When the command is accepted, the Drive sets BSY. When the requested sectors have been verified, the Drive clears BSY and generates an interrupt.
If an error occurs, the verify terminates at the sector where the error occurs. The Command Block Registers contain the cylinder, head and sector number of the sector where the error occurred. The Sector Count Register contains the number of sectors not yet verified.

Table 27 defines the Read Verify Sector command Byte sequence.

Table 27: Read Verify Sector(s)

Task File Register	7	6	5	4	3	2	1	0
COMMAND	40h or 41h							
DRIVE/HEAD	1	LBA	1	D	Head (LBA 27-24)			
CYLINDER HI	Cylinder High (LBA23-16)							
CYLINDER LOW	Cylinder Low (LBA15-8)							
SECTOR NUM	Sector Number (LBA7-0)							
SECTOR COUNT	Sector Count							
FEATURES	nu							

6.15 Request Sense (03h)

This command requests extended error information for the previous command. Table 28 defines the Request Sense command Byte sequence.
Table 29 defines the valid extended error codes. The extended error code is returned to the host in the Error Register.

Table 28: Request sense

Task File Register	7	6	5	4	3	2	1	0
COMMAND	03h							
DRIVE/HEAD	1	LBA	1	D	nu			
CYLINDER HI	nu							
CYLINDER LOW	nu							
SECTOR NUM	nu							
SECTOR COUNT	nu							
FEATURES	nu							

Table 29: Extended Error Codes

Extended Error Code	Description
00h	No Error Detected
01h	Self Test OK (No Error)
09h	Miscellaneous Error
21h	Invalid Address (Requested Head or Sector Invalid)
2Fh	Address Overflow (Address Too Large)
35h, 36h	Supply or generated Voltage Out of Tolerance
11h	Uncorrectable ECC Error
18h	Corrected ECC Error
05h, 30-34h, 37h, 3Eh	Self Test or Diagnostic Failed
10h, 14h	ID Not Found
3Ah	Spare Sectors Exhausted
1Fh	Data Transfer Error / Aborted Command
0Ch, 38h, 3Bh, 3Ch, 3Fh	Corrupted Media Format
03h	Write / Erase Failed

6.16 Security Disable Password (F6h)

This command requests a transfer of a single sector of data from the host. Table 30 defines the content of this sector of information. If the password selected by word 0 matches the password previously saved by the device, the device disables the lock mode. This command does not change the Master password that may be reactivated later by setting a User password.

Table 30: Security Disable Password

Task File Register	7	6	5	4	3	2	1	0
COMMAND	F6h							
DRIVE/HEAD	1	LBA	1	D	nu			
CYLINDER HI	nu							
CYLINDER LOW	nu							
SECTOR NUM	nu							
SECTOR COUNT	nu							
FEATURES	nu							

Table 31: Security Password Data Content

Word	Content
0	Control word Bit 0: identifier 0=compare User password 1=compare Master password Bit 1-15: Reserved
1-16	Password (32 bytes)
17-255	Reserved

6.17 Security Erase Prepare (F3h)

This command shall be issued immediately before the Security Erase Unit command to enable device erasing and unlocking. This command prevents accidental erase of the SSD.

Table 32: Security Erase Prepare

Task File Register	7	6	5	4	3	2	1	0
COMMAND	F3h							
DRIVE/HEAD	1	LBA	1	D	nu			
CYLINDER HI	nu							
CYLINDER LOW	nu							
SECTOR NUM	nu							
SECTOR COUNT	nu							
FEATURES	nu							

6.18 Security Erase Unit (F4h)

This command requests transfer of a single sector of data from the host. Table 31 defines the content of this sector of information. If the password does not match the password previously saved by the SSD, the SSD rejects the command with command aborted. The Security Erase Prepare command shall be completed immediately prior to the Security Erase Unit command. If the SSD receives a Security Erase Unit command without an immediately prior Security Erase Prepare command, the SSD aborts the Security Erase Unit command.

Table 33: Security Erase Unit

Task File Register	7	6	5	4	3	2	1	0
COMMAND	F4h							
DRIVE/HEAD	1	LBA	1	D	nu			
CYLINDER HI	nu							
CYLINDER LOW	nu							
SECTOR NUM	nu							
SECTOR COUNT	nu							
FEATURES	nu							

6.19 Security Freeze Lock (F5h)

The Security Freeze Lock command sets the SSD to Frozen mode. After command completion, any other commands that update the SSD Lock mode are rejected. Frozen mode is disabled by power off or hardware reset. If Security Freeze Lock is issued when the SSD is in Frozen mode, the command executes and the SSD remains in Frozen mode. After command completion, the Sector Count Register shall be set to 0.
Commands disabled by Security Freeze Lock are:

- Security Set Password
- Security Unlock
- Security Disable Password
- Security Erase Unit

If security mode feature set is not supported, this command shall be handled as Wear Level command.

Table 34: Security Freeze Lock

Task File Register	7	6	5	4	3	2	1	0
COMMAND	F5h							
DRIVE/HEAD	1	LBA	1	D	nu			
CYLINDER HI	nu							
CYLINDER LOW	nu							
SECTOR NUM	nu							
SECTOR COUNT	nu							
FEATURES	nu							

6.20 Security Set Password (F1h)

This command requests a transfer of a single sector of data from the host. Table 36 defines the content of the sector of information. The data transferred controls the function of this command.

Table 37 defines the interaction of the identifier and security level bits.

Table 35: Security Set Password

Task File Register	7	6	5	4	3	2	1	0
COMMAND	F1h							
DRIVE/HEAD	1	LBA	1	D	nu			
CYLINDER HI	nu							
CYLINDER LOW	nu							
SECTOR NUM	nu							
SECTOR COUNT	nu							
FEATURES	nu							

Table 36: Security Set Password Data Content

Word	Content
0	Control word Bit 0: identifier 0=set User password 1=set Master password Bit 1-7: Reserved Bit 8: Security level 0=High 1=Maximum Bits 9-15: Reserved
1-16	Password (32 bytes)
17-255	Reserved

Table 37: Identifier and Security Level Bit Interaction

Identifier	Level	Command result
User	High	The password supplied with the command shall be saved as the new User password. The lock mode shall be enabled from the next power-on or hardware reset. The SSD shall then be unlocked by either the User password or the previously set Master password.
User	Maximum	The password supplied with the command shall be saved as the new User password. The lock mode shall be enabled from the next power-on or hardware reset. The SSD shall then be unlocked by only the User password. The Master password previously set is still stored in the SSD shall not be used to unlock the SSD.
Master	High or Maximum	This combination shall set a Master password but shall not enable or disable the Lock mode. The security level is not changed.

6.21 Security Unlock (F2h)

This command requests transfer of a single sector of data from the host. Table 31 defines the content of this sector of information. If the identifier bit is set to Master and the device is in high security level, then the password supplied shall be compared with the stored Master password. If the device is in the maximum security level, then the unlock command shall be rejected. If the identifier bit is set to user, then the device compares the supplied password with the stored User password. If the password compare fails then the device returns command aborted to the host and decrements the unlock counter. This counter is initially set to five and is decremented for each password mismatch when Security Unlock is issued and the device is locked. Once this counter reaches zero, the Security Unlock and Security Erase Unit commands are command aborted until after a power-on reset or a hardware reset is received. Security Unlock commands issued when the device is unlocked have no effect on the unlock counter.

Table 38: Security Unlock

Task File Register	7	6	5	4	3	2	1	0
COMMAND	F2h							
DRIVE/HEAD	1	LBA	1	D	nu			
CYLINDER HI	nu							
CYLINDER LOW	nu							
SECTOR NUM	nu							
SECTOR COUNT	nu							
FEATURES	nu							

6.22 Set Features (EFh)

This command is used by the host to establish or select certain features. If any subcommand input value is not supported or is invalid, the SSD returns command aborted.

Table 39: Set Features

Task File Register	7	6	5	4	3	2	1	0
COMMAND	EFh							
DRIVE/HEAD	nu			D	nu			
CYLINDER HI	nu							
CYLINDER LOW	nu							
SECTOR NUM	nu							
SECTOR COUNT	Config							
FEATURES	Feature							

Table 40: Features Supported

Feature	Operation
01h/81h	Enable/Disable 8-bit data transfers.
02h/82h	Enable/Disable write cache.
03h	Set transfer mode based on value in Sector Count register.
05h/85h	Enable/Disable advance power management.
09h/89h	Enable/Disable extended power operations.
0Ah/8Ah	Enable/Disable power level 1 commands.
55h/AAh	Disable/Enable Read Look Ahead.
66h/CCh	Disable/Enable Power On Reset (POR) established of defaults at Soft Reset.
69h	NOP Accepted for backward compatibility.
96h	NOP Accepted for backward compatibility.
97h	Accepted for backward compatibility. Use of this Feature is not recommended.
9Ah	Set the host current source capability. Allows trade-off between current drawn and read/write speed.
BBh	4 bytes of data apply on Read/Write Long commands

Features 01h and 81h are used to enable and clear 8 bit data transfer modes in True IDE Mode. If the 01h feature command is issued all data transfers shall occur on the low order D[7:0] data bus and the -IOIS16 signal shall not be asserted for data register accesses. The host shall not enable this feature for DMA transfers.

Features 02h and 82h allow the host to enable or disable write cache in SSD that implement write cache. When the subcommand disable write cache is issued, the SSD shall initiate the sequence to flush cache to non-volatile memory before command completion.
Feature 03h allows the host to select the PIO or Multiword DMA transfer mode by specifying a value in the Sector Count register. The upper 5 bits define the type of transfer and the low order 3 bits encode the mode value. One PIO mode shall be selected at all times. For Cards which support DMA, one DMA mode shall be selected at all times. The host may change the selected modes by the Set Features command.

Table 41: Transfer Mode Values

Mode	Bits (7:3)	Bits (2:0)
PIO default mode	00000b	000b
PIO default mode, disable IORDY	00000b	001b
PIO flow control transfer mode	00001b	Mode(1)
Reserved	00010b	N/A
Multi-Word DMA mode	00100b	Mode(1)
Ultra DMA mode	01000b	Mode(1)
Reserved	1000b	N/A

(1)Mode = transfer mode number

Notes: Multiword DMA is not permitted for devices configured in the PC Card Memory or the PC Card I/O interface mode.

If a SSD supports PIO modes greater than 0 and receives a Set Features command with a Set Transfer Mode parameter and a Sector Count register value of "00000000b", it shall set its default PIO mode. If the value is "00000001b" and the SSD supports disabling of IORDY, then the SSD shall set its default PIO mode and disable IORDY. A SSD shall support all PIO modes below the highest mode supported, e.g., if PIO mode 1 is supported PIO mode 0 shall be supported.
Support of IORDY is mandatory when PIO mode 3 or above is the current mode of operation.
A SSD reporting support for Multiword DMA modes shall support all Multiword DMA modes below the highest mode supported. For example, if Multiword DMA mode 2 support is reported, then modes 1 and 0 shall also be supported. Note that Multiword DMA shall not be supported while PC Card interface modes are selected.
A SSD reporting support for Ultra DMA modes shall support all Ultra DMA modes below the highest mode supported. For example, if Ultra DMA mode 2 support is reported then modes 1 and 0 shall also be supported.
If an Ultra DMA mode is enabled, any previously enabled Multiword DMA mode shall be disabled by the device.
If a Multiword DMA mode is enabled any previously enabled Ultra DMA mode shall be disabled by the device.
Feature 05h allows the host to enable Advanced Power Management. To enable Advanced Power Management, the host writes the Sector Count register with the desired advanced power management level and then executes a Set Features command with subcommand code 05h. The power management level is a scale from the lowest power consumption setting of 01h to the maximum performance level of FEh.

Table 42: Advanced power management levelsTable 42 shows these values.

Table 42: Advanced power management levels

Level	Sector Count Value
Maximum performance	FEh
Intermediate power management levels without Standby	81h-FDh
Minimum power consumption without Standby	80h
Intermediate power management levels with Standby	02h-7Fh
Minimum power consumption with Standby	01h
Reserved	FFh
Reserved	00h

In the current version the advanced power management levels are accepted, but don't influence performance and power consumption.
Device performance may increase with increasing power management levels. Device power consumption may increase with increasing power management levels. The power management levels may contain discrete bands. For example, a device may implement one power management method from 80h to A0h and a higher performance, higher power consumption method from level A1h to FEh. Advanced power management levels 80h and higher do not permit the device to spin down to save power.
Feature 85h disables Advanced Power Management. Subcommand 85h may not be implemented on all devices that implement Set Features subcommand 05h.

Features 0Ah and 8Ah are used to enable and disable Power Level 1 commands. Feature 0Ah is the default feature for the SSD with extended power as they require Power Level 1 to perform their full set of functions. Power Enhanced SSDs are required to power up and execute all supported commands and protocols in Power Level 0, their default feature shall be 8Ah: Disable Power Level 1 Commands. No commands are actually excluded for such cards in Power Level 0 because no commands require Power Level 1. Features 55h and BBh are the default features for the SSD; thus, the host does not have to issue this command with these features unless it is necessary for compatibility reasons.
Feature code 9Ah enables the host to configure the card to best meet the host system's power requirements. The host sets a value in the Sector Count register that is equal to one-fourth of the desired maximum average current (in mA) that the card should consume. For example, if the Sector Count register were set to 6, the card would be configured to provide the best possible performance without exceeding 24 mA. Upon completion of the command, the card responds to the host with the range of values supported by the card. The minimum value is set in the Cylinder Low register, and the maximum value is set in the Cylinder Hi register. The default value, after a power on reset, is to operate at the highest performance and therefore the highest current mode. The card shall accept values outside this programmable range, but shall operate at either the lowest power or highest performance as appropriate.
Features 66h and CCh can be used to enable and disable whether the Power On Reset (POR) Defaults shall be set when a soft reset occurs. The default setting is to revert to the POR defaults when a soft reset occurs.

6.23 Set max address (F9h)

The Set max address command sets the max address of the drive. It is related to the Host protected Area feature set. Table 43 defines the Set max address command Byte sequence.

Table 43: Read native max address

Task File Register	7	6	5	4	3	2	1	0
COMMAND	F8h							
DRIVE/HEAD	nu	LBA	nu	D	Set max LBA (27:24)			
CYLINDER HI	Set max LBA (23:16)							
CYLINDER LOW	Set max LBA (15:8)							
SECTOR NUM	Set max LBA (7:0)							
SECTOR COUNT	nu							VV
FEATURES	Feature							

The LBA bit shall be set to one to specify the address is an LBA. DEV shall specify the selected device.

Prerequisites
DRDY set to one. A successful READ NATIVE MAX ADDRESS command shall immediately precede a SET MAX ADDRESS command.
VV =Value volatile. If bit 0 is set to one, the device shall preserve the maximum values over power-up or hardware reset. If bit 0 is cleared to zero, the device shall revert to the most recent nonvolatile maximum address value setting over power-up or hardware reset.

The set max address can be locked/unlocked and secured by password with following features:

Table 44: Set max features

Feature register	Command
00h	Obsolete
01h	SET MAX SET PASSWORD
02h	SET MAX LOCK
03h	SET MAX UNLOCK
04h	SET MAX FREEZE LOCK
05-FFh	Reserved

Typical use of the Set max address (F9h) and Read native max address (F8h) commands would be:

On reset
BIOS receives control after a system reset;

1. BIOS issues a READ NATIVE MAX ADDRESS command to find the max capacity of the device;
2. BIOS issues a SET MAX ADDRESS command to the values returned by READ NATIVE MAX ADDRESS;
3. BIOS reads configuration data from the highest area on the disk;
4. BIOS issues a READ NATIVE MAX ADDRESS command followed by a SET MAX ADDRESS command to reset the device to the size of the file system.

On save to disk

1. BIOS receives control prior to shut down;
2. BIOS issues a READ NATIVE MAX ADDRESS command to find the max capacity of the device;
3. BIOS issues a volatile SET MAX ADDRESS command to the values returned by READ NATIVE MAX ADDRESS;
4. Memory is copied to the reserved area;
5. Shut down completes;
6. On power-on or hardware reset the device max address returns to the last non-volatile setting.

These commands are intended for use only by system BIOS or other low-level boot time process.
Using these commands outside BIOS controlled boot or shutdown may result in damage to file systems on the device. Devices should return command aborted if a subsequent non-volatile SET MAX ADDRESS command is received after a power-on or hardware reset.

6.24 Set Multiple Mode (C6h)

This command enables the Drive to perform Read and Write Multiple operations and establishes the block count for these commands. The Sector Count Register is loaded with the number of sectors per block. Upon receipt of the command, the Drive sets BSY and checks the Sector Count Register.
If the Sector Count Register contains a valid value and the block count is supported, the value is loaded for all subsequent Read Multiple and Write Multiple commands and execution is enabled. If a block count is not supported, an Aborted Command error is posted, and Read Multiple and Write Multiple commands are disabled. If the Sector Count Register contains '0' when the command is issued, Read and Write Multiple commands are disabled. At power on the default mode is Read and Write Multiple disabled, unless it is disabled by a Set Feature command. Table 45 defines the Set Multiple Mode command Byte sequence.

Table 45: Set Multiple Mode

Task File Register	7	6	5	4	3	2	1	0
COMMAND	C6h							
DRIVE/HEAD	nu			D	nu			
CYLINDER HI	nu							
CYLINDER LOW	nu							
SECTOR NUM	nu							
SECTOR COUNT	Sector Count							
FEATURES	nu							

6.25 Sleep (99h or E6)

This command causes the Drive to set BSY, enter the Sleep mode (which corresponds to the ATA 'Standby' Mode), clear BSY and return the interrupt immediately. Recovery from Sleep mode is accomplished by issuing another command. Table 46 defines the Standby command Byte sequence.

Table 46: Sleep

Task File Register	7	6	5	4	3	2	1	0
COMMAND	99h or E6h							
DRIVE/HEAD	nu			D	nu			
CYLINDER HI	nu							
CYLINDER LOW	nu							
SECTOR NUM	nu							
SECTOR COUNT	nu							
FEATURES	nu							

6.26 S.M.A.R.T. (B0h)

The intent of self-monitoring, analysis, and reporting technology (the SMART feature set) is to protect user data and minimize the likelihood of unscheduled system downtime that may be caused by predictable degradation and/or fault of the device. By monitoring and storing critical performance and calibration parameters, SMART feature set devices attempt to predict the likelihood of near-term degradation or fault condition. Providing the host system the knowledge of a negative reliability condition allows the host system to warn the user of the impending risk of a data loss and advise the user of appropriate action. Support of this feature set is indicated in the IDENTIFY DEVICE data (Word 82 bit 0).

Table 47: S.M.A.R.T. Features

Task File Register	7	6	5	4	3	2	1	0
COMMAND	B0h							
DRIVE/HEAD	1	1	1	D	nu			
CYLINDER HI	C2h							
CYLINDER LOW	4Fh							
SECTOR NUM	nu							
SECTOR COUNT	XXh							
FEATURES	Feature							

Details of S.M.A.R.T. features are described in Section 7.

6.27 Standby (96h or E2)

This command causes the Drive to set BSY, enter the Sleep mode (which corresponds to the ATA 'Standby' Mode), clear BSY and return the interrupt immediately. Recovery from Sleep mode is accomplished by issuing another command. Table 48 defines the Standby command Byte sequence.

Table 48: Standby

Task File Register	7	6	5	4	3	2	1	0
COMMAND	96h or E2h							
DRIVE/HEAD	nu			D	nu			
CYLINDER HI	nu							
CYLINDER LOW	nu							
SECTOR NUM	nu							
SECTOR COUNT	nu							
FEATURES	nu							

6.28 Standby Immediate (94h or E0h)

This command causes the Drive to set BSY, enter the Sleep mode (which corresponds to the ATA Standby Mode), clear BSY and return the interrupt immediately.
Recovery from Sleep mode is accomplished by issuing another command. Table 49 defines the Standby Immediate Byte sequence.

Table 49: Standby Immediate

Task File Register	7	6	5	4	3	2	1	0
COMMAND	94h or E0h							
DRIVE/HEAD	nu			D	nu			
CYLINDER HI	nu							
CYLINDER LOW	nu							
SECTOR NUM	nu							
SECTOR COUNT	nu							
FEATURES	nu							

6.29 Translate Sector (87h)

This command is effectively a NOP command and only implemented for backward compatibility. The Sector Count Register will always be returned with a '00h' indicating Translate Sector is not needed.
Table 50 defines the Translate Sector command Byte sequence.

Table 50: Translate Sector

Task File Register	7	6	5	4	3	2	1	0
COMMAND	87h							
DRIVE/HEAD	1	LBA	1	D	Head (LBA 27-24)			
CYLINDER HI	Cylinder High (LBA23-16)							
CYLINDER LOW	Cylinder Low (LBA15-8)							
SECTOR NUM	nu (LBA7-0)							
SECTOR COUNT	nu							
FEATURES	nu							

6.30 Write Buffer (E8h)

The Write Buffer command enables the host to overwrite contents of the Drive's sector buffer with any data pattern desired. This command has the same protocol as the Write Sector(s) command and transfers 512 Bytes.
Table 51 defines the Write Buffer command Byte sequence.

Table 51: Write Buffer

Task File Register	7	6	5	4	3	2	1	0
COMMAND	E8h							
DRIVE/HEAD	nu			D	nu			
CYLINDER HI	nu							
CYLINDER LOW	nu							
SECTOR NUM	nu							
SECTOR COUNT	nu							
FEATURES	nu							

6.31 Write DMA (CAh)

This command uses DMA mode to write from 1 to 256 sectors as specified in the Sector Count register. A sector count of 0 requests 256 sectors. The transfer begins at the sector specified in the Sector Number Register. When this command is issued the Drive sets BSY, puts all or part of the sector of data in the buffer. The Drive is then permitted, although not required, to set DRQ, clear BSY. The Drive asserts DMAREQ while data is available to be transferred. The host then writes the (512 * sector-count) bytes of data to the Drive using DMA. While DMAREQ is asserted by the Drive, the Host asserts -DMACK while it is ready to transfer data by DMA and asserts -IOWR once for each 16 bit word to be transferred from the Host.
Interrupts are not generated on every sector, but upon completion of the transfer of the entire number of sectors to be transferred or upon the occurrence of an unrecoverable error. At command completion, the Command Block Registers contain the cylinder, head and sector number of the last sector written. If an error occurs, the write terminates at the sector where the error occurred. The Command Block Registers contain the cylinder, head, and sector number of the sector where the error occurred. The amount of data transferred is indeterminate.
When a Write DMA command is received by the Drive and 8 bit transfer mode has been enabled by the Set Features command, the Drive shall return the Aborted error.

Table 52: Write DMA

Task File Register	7	6	5	4	3	2	1	0
COMMAND	CAh							
DRIVE/HEAD	LBA			D	Head (LBA 27-24)			
CYLINDER HI	Cylinder High (LBA23-16)							
CYLINDER LOW	Cylinder Low (LBA15-8)							
SECTOR NUM	Sector number (LBA7-0)							
SECTOR COUNT	Sector Count							
FEATURES	nu							

6.32 Write Multiple Command (C5h)

This command is similar to the Write Sectors command. The Drive sets BSY within 400ns of accepting the command. Interrupts are not presented on each sector but on the transfer of a block which contains the number of sectors defined by Set Multiple. Command execution is identical to the Write Sectors operation except that the number of sectors defined by the Set Multiple command is transferred without intervening interrupts. DRQ qualification of the transfer is required only at the start of the data block, not on each sector. The block count of sectors to be transferred without intervening interrupts is programmed by the Set Multiple Mode command, which must be executed prior to the Write Multiple command.
When the Write Multiple command is issued, the Sector Count Register contains the number of sectors (not the number of blocks or the block count) requested. If the number of requested sectors is not evenly divisible by the sector/block, as many full blocks as possible are transferred, followed by a final, partial block transfer. The partial block transfer is for n sectors, where:
n = (sector count) module (block count).
If the Write Multiple command is attempted before the Set Multiple Mode command has been executed or when Write Multiple commands are disabled, the Write Multiple operation will be rejected with an aborted command error.
Errors encountered during Write Multiple commands are posted after the attempted writes of the block or partial block transferred. The Write command ends with the sector in error, even if it is in the middle of a block. Subsequent blocks are not transferred in the event of an error. Interrupts are generated when DRQ is set at the beginning of each block or partial block.
The Command Block Registers contain the cylinder, head and sector number of the sector where the error occurred and the Sector Count Register contains the residual number of sectors that need to be transferred for successful completion of the command. For example, each block has 4 sectors, a request for 8 sectors is issued and an error occurs on the third sector. The Sector Count Register contains 6 and the address is that of the third sector.
Note: The current revision of the Drive only supports a block count of 1 as indicated in the Identify Drive Command information. The Write Multiple command is provided for compatibility with future products which may support a larger block count.
Table 53 defines the Write Multiple command Byte sequence.

Table 53: Write Multiple

Task File Register	7	6	5	4	3	2	1	0
COMMAND	C5h							
DRIVE/HEAD	1	LBA	1	D	Head (LBA 27-24)			
CYLINDER HI	Cylinder High (LBA23-16)							
CYLINDER LOW	Cylinder Low (LBA15-8)							
SECTOR NUM	Sector number (LBA7-0)							
SECTOR COUNT	Sector Count							
FEATURES	nu							

6.33 Write Multiple without Erase (CDh)

This command is similar to the Write Multiple command with the exception that an implied erase before write operation is not performed. The sectors should be pre-erased with the Erase Sector(s) command before this command is issued. Table 54 defines the Write Multiple without Erase command Byte sequence.

Table 54: Write Multiple without Erase

Task File Register	7	6	5	4	3	2	1	0
COMMAND	CDh							
DRIVE/HEAD	1	LBA	1	D	Head (LBA 27-24)			
CYLINDER HI	Cylinder High (LBA23-16)							
CYLINDER LOW	Cylinder Low (LBA15-8)							
SECTOR NUM	Sector number (LBA7-0)							
SECTOR COUNT	Sector Count							
FEATURES	nu							

6.34 Write Sector(s) (30h)

This command writes from 1 to 256 sectors as specified in the Sector Count Register. A sector count of zero requests 256 sectors. The transfer begins at the sector specified in the Sector Number Register. When this command is accepted, the Drive sets BSY, sets DRQ and clears BSY, then waits for the host to fill the sector buffer with the data to be written. No interrupt is generated to start the first host transfer operation. No data should be transferred by the host until BSY has been cleared by the host.
For multiple sectors, after the first sector of data is in the buffer, BSY will be set and DRQ will be cleared. After the next buffer is ready for data, BSY is cleared, DRQ is set and an interrupt is generated. When the final sector of data is transferred, BSY is set and DRQ is cleared. It will remain in this state until the command is completed at which time BSY is cleared and an interrupt is generated. If an error occurs during a write of more than one sector, writing terminates at the sector where the error occurred. The Command Block Registers contain the cylinder, head and sector number of the sector where the error occurred. The host may then read the command block to determine what error has occurred, and on which sector. Table 55 defines the Write Sector(s) command Byte sequence.

Table 55: Write Sector(s)

Task File Register	7	6	5	4	3	2	1	0
COMMAND	30h							
DRIVE/HEAD	1	LBA	1	D	Head (LBA 27-24)			
CYLINDER HI	Cylinder High (LBA23-16)							
CYLINDER LOW	Cylinder Low (LBA15-8)							
SECTOR NUM	Sector number (LBA7-0)							
SECTOR COUNT	Sector Count							
FEATURES	nu							

6.35 Write Sector(s) without Erase (38h)

This command is similar to the Write Sector(s) command with the exception that an implied erase before write operation is not performed. This command has the same protocol as the Write Sector(s) command. The sectors should be pre-erased with the Erase Sector(s) command before this command is issued. If the sector is not pre-erased a normal write sector operation will occur. Table 56 defines the Write Sector(s) without Erase command Byte sequence.

Table 56: Write Sector(s) without Erase

Task File Register	7	6	5	4	3	2	1	0
COMMAND	38h							
DRIVE/HEAD	1	LBA	1	D	Head (LBA 27-24)			
CYLINDER HI	Cylinder High (LBA23-16)							
CYLINDER LOW	Cylinder Low (LBA15-8)							
SECTOR NUM	Sector number (LBA7-0)							
SECTOR COUNT	Sector Count							
FEATURES	nu							

7 S.M.A.R.T. Functionality

The SSD supports the following SMART commands, determined by the Feature Register value.

Table 57: S.M.A.R.T. Features Supported

Feature	Operation
D0h	SMART Read Data
D1h	SMART Read Attribute Thresholds
D2h	SMART Enable/Disable Autosave
D3h	SMART Save Attribute Values
D4h	SMART Execute OFF-LINE Immediate
D8h	SMART Enable Operations
D9h	SMART Disable Operations
DAh	SMART Return Status

SMART commands with Feature Register values not mentioned in the above table are not supported, and will be aborted.

7.1 S.M.A.R.T. Enable / Disable operations

This command enables / disables access to the SMART capabilities of the SSD.
The state of SMART (enabled or disabled) is preserved across power cycles.

Table 58: S.M.A.R.T. Enable / Disable operations (Feature D8h / D9h)

Task File Register	7	6	5	4	3	2	1	0
COMMAND	B0h							
DRIVE/HEAD	1	1	1	D	nu			
CYLINDER HI	C2h							
CYLINDER LOW	4Fh							
SECTOR NUM	nu							
SECTOR COUNT	nu							
FEATURES	D8h / D9h							

7.2 S.M.A.R.T. Return Status

This command checks the device reliability status. If the number of available spare blocks drops below an internal threshold, the device will set the Cylinder Low register to F4h and the Cylinder High register to 2Ch. If no threshold exceeded condition exists, the device will set the Cylinder Low register to 4Fh and the Cylinder High register to C2h.

Table 59: S.M.A.R.T. return status (Feature DAh)

Task File Register	7	6	5	4	3	2	1	0
COMMAND	B0h							
DRIVE/HEAD	1	1	1	D	nu			
CYLINDER HI	C2h							
CYLINDER LOW	4Fh							
SECTOR NUM	nu							
SECTOR COUNT	nu							
FEATURES	DAh							

7.3 S.M.A.R.T. Enable / Disable Attribute Autosave

This command is effectively a no-operation as the data for the SMART functionality is always available and kept current in the SSD.

Table 60: S.M.A.R.T. Enable / Disable Attribute Autosave (Feature D2h)

Task File Register	7	6	5	4	3	2	1	0
COMMAND	B0h							
DRIVE/HEAD	1	1	1	D	nu			
CYLINDER HI	C2h							
CYLINDER LOW	4Fh							
SECTOR NUM	nu							
SECTOR COUNT	F1h or 00h (enable or disable)							
FEATURES	D2h							

7.4 S.M.A.R.T. Save Attribute Values

This command causes the device to immediately save any updated attribute values to the device's non-volatile memory regardless of the state of the attribute autosave timer. Upon receipt of this command from the host, the device sets BSY, writes any updated attribute values to non-volatile memory, clears BSY, and asserts INTRQ. This command is effectively a no-operation command.

Table 61: S.M.A.R.T. Save Attribute Values (Feature D3h)

Task File Register	7	6	5	4	3	2	1	0
COMMAND	B0h							
DRIVE/HEAD	1	1	1	D	nu			
CYLINDER HI	C2h							
CYLINDER LOW	4Fh							
SECTOR NUM	Nu							
SECTOR COUNT	nu							
FEATURES	D3h							

7.5 S.M.A.R.T. Execute OFF-LINE Immediate

This command is effectively a no-operation as the data for the SMART functionality is always available and kept current in the SSD.

Table 62: S.M.A.R.T. Execute OFF-LINE Immediate (Feature D4h)

Task File Register	7	6	5	4	3	2	1	0
COMMAND	B0h							
DRIVE/HEAD	1	1	1	D	nu			
CYLINDER HI	C2h							
CYLINDER LOW	4Fh							
SECTOR NUM	nu (Subcommand specific)							
SECTOR COUNT	nu							
FEATURES	D4h							

7.6 S.M.A.R.T. Read data

This command returns one sector of SMART data.

Table 63: S.M.A.R.T. read data (Feature D0h)

Task File Register	7	6	5	4	3	2	1	0
COMMAND	B0h							
DRIVE/HEAD	1	1	1	D	nu			
CYLINDER HI	C2h							
CYLINDER LOW	4Fh							
SECTOR NUM	nu							
SECTOR COUNT	nu							
FEATURES	D0h							

The data structure returned is:

Table 64: S.M.A.R.T. Data Structure

Offset	Typ. Value	Description
0..1	0100h	SMART structure version
2..361	30x12Bytes	Attribute entries 1 to 30 (12 bytes each, little endian, see below)
362	31h	Off-line data collection status (no off-line data collection)
363	00h	Self-test execution status byte (self-test completed)
364..365	3200h	Total time in seconds to complete off-line data collection
366	00h	Vendor specific
367	00h	Off-line data collection capability (no off-line data collection)
368..369	0200h	SMART capabilities
370	00h	Error logging capability (no error logging)
371	00h	Vendor specific
372	01h	Short self-test routine recommended polling time
373	01h	Extended self-test routine recommended polling time
374	00h	Conveyance self-test routine recommended polling time
375..385	00h	Reserved
386..395	XXh	Firmware Version/Date code (e.g. 2010-01-06)
396...397	**00XXh***	Initial invalid block (big endian)
398..399	**00XXh***	Run time invalid block (big endian)
400...406	SMI2242	Controller
407...415	00h	Reserved
416	00h	Non-Hybrid Mode
417		Reserved
418...419	**00XXh***	Number of spare blocks (big endian)
420...423	**XXXXXXXXh***	Average Erase Count (big endian)
424...425	XXXXh	Current child pair (big endian)
426...431	00h	Reserved
432...510	00h	Vendor specific
511	XXh	Data structure checksum

* These fields changes during operation and give life time information.

There are 12 attributes that are defined in the SSD. These return their data in the attribute section of the SMART data, using a 12 byte data field.
Only the "Power_Cycle_Count"-Attribute counts the power-on cycles, all other attributes keep at 100% and raw value 0. The Threshold values can be read out with the separate command (see Table 67).

Table 65: S.M.A.R.T. Attributes

ID	Description	Value	Worst	Thresh	Raw Value
1	Raw_Read_Error_Rate	100	100	000	0
2	Throughput_Performance	100	100	000	0
5	Reallocated_Sector_Count	100	100	000	0
7	Seek_Error_Rate	100	100	000	0
8	Seek_Time_Performance	100	100	000	0
12	**Power_Cycle_Count**	100	100	000	**XXXXXXXX**
195	Hardware_ECC_Recovered	100	100	000	0
196	Reallocated_Event_Count	100	100	000	0
197	Current_Pending_Sector	100	100	000	0
198	Offline_Uncorrectable	100	100	000	0
199	UDMA_CRC_Error_Count	100	100	000	0
200	Multi_Zone_Error_Rate	100	100	000	0

7.6.1 Attribute Entries

This table shows the structure of the S.M.A.R.T. attribute entries in the S.M.A.R.T. data structure.

Table 66: Attribute Entry

Offset	Value	Description
0	xxh	Attribute ID – (see **Table 65**)
1..2	0000h	Flags – Old age
3	64h	Attribute value. The value returned here is the minimum percentage of remaining value
4	64h	Worst value. The value returned here is the minimum percentage of remaining value
5..8	xxxxxxxxh	Raw value (little endian) Only Power cycle count has real values
9..11		reserved

7.6.2 S.M.A.R.T. Read Attribute Thresholds

This command returns one sector of SMART attribute thresholds.

Table 67: S.M.A.R.T. read data thresholds (Feature D1h)

Task File Register	7	6	5	4	3	2	1	0
COMMAND	B0h							
DRIVE/HEAD	1	1	1	D	nu			
CYLINDER HI	C2h							
CYLINDER LOW	4Fh							
SECTOR NUM	nu							
SECTOR COUNT	nu							
FEATURES	D1h							

The data structure returned is:

Table 68: S.M.A.R.T. Data Threshold Structure

Offset	Value	Description
0..1	0100h	SMART structure version
2..361		Attribute threshold entries 1 to 30 (12 bytes each)
362..379	00h	Reserved
380..510	00h	-
511		Data structure checksum

This table shows the structure of the S.M.A.R.T. attribute entries in the S.M.A.R.T. data structure.

Table 69: Attribute Threshold Entry

Offset	Value	Description
0	xxh	Attribute ID – (see **Table 65**)
1	00h	Attribute Threshold (always passing)
2..11		reserved

8 Package mechanical

Figure 1: mSATA SSD Drive Dimensions

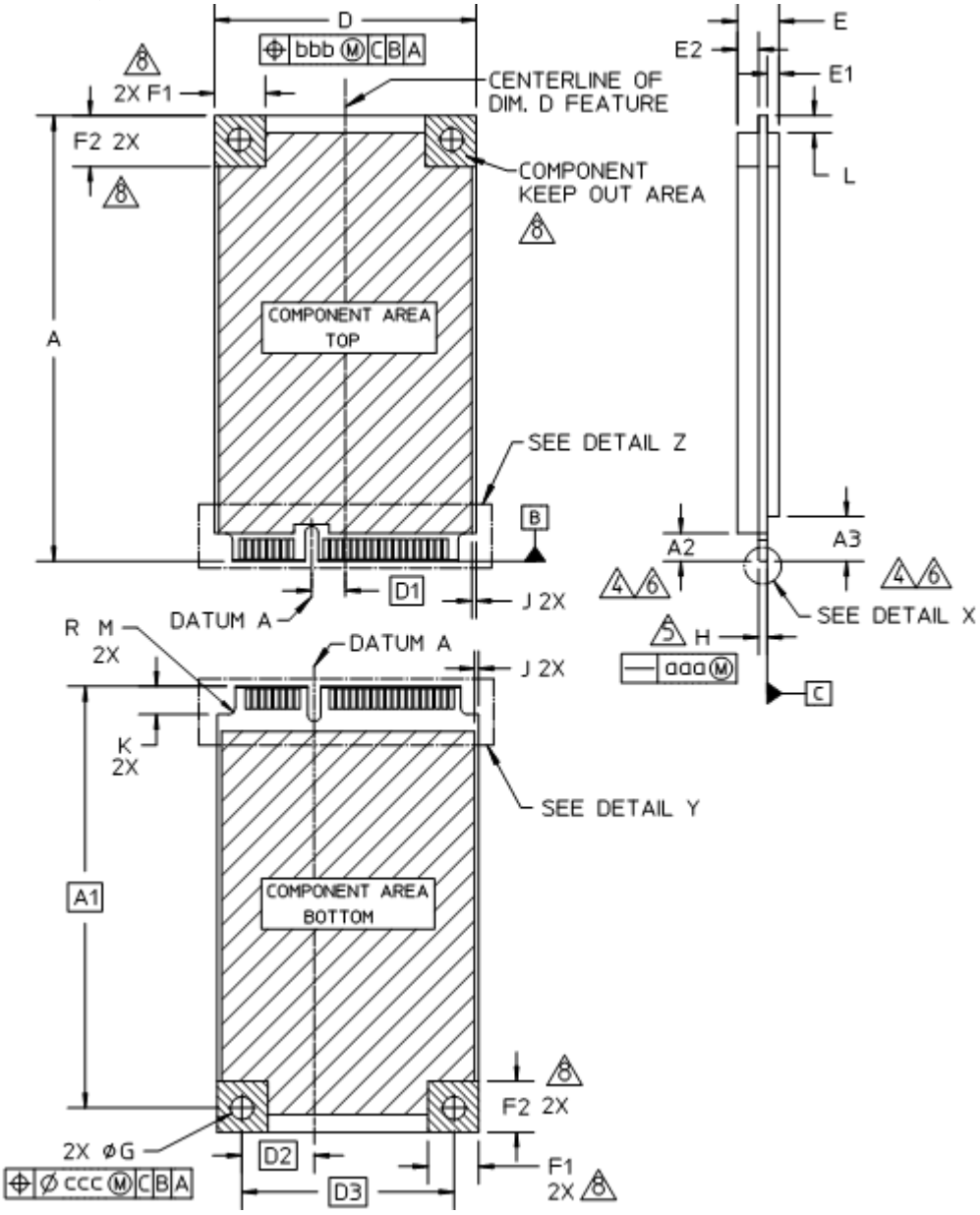

Figure 2: Connector specification

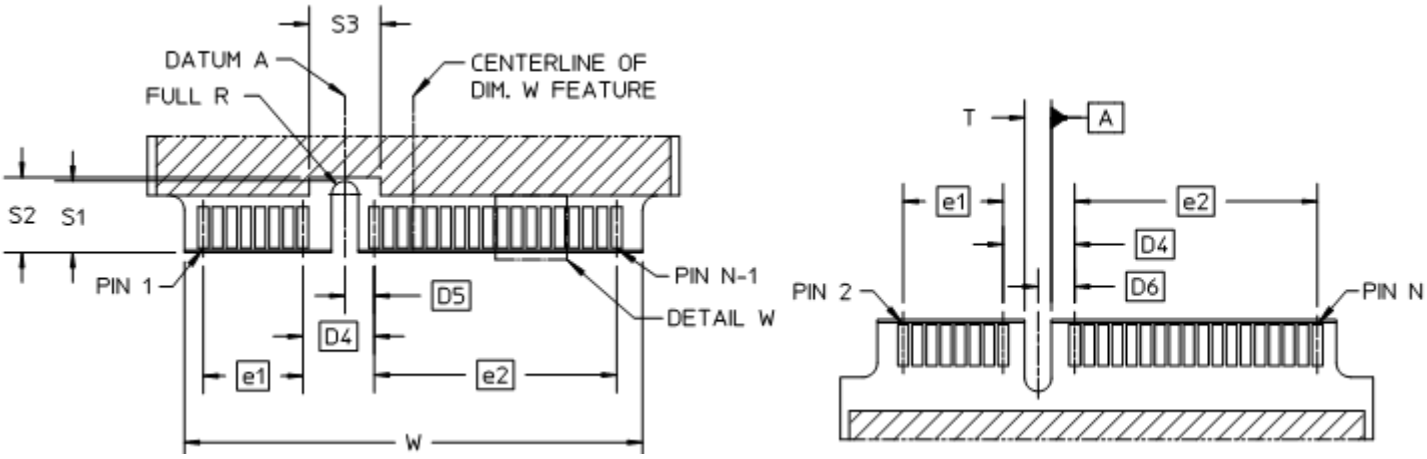

Dimension	symbol	min	nom	max
length	A	50.65	50.80	50.95
hole position	A1		48.05 BASIC	
top keep out	A2	3.2		
bottom keep out	A3	5.1		
width	D	29.70	29.85	30.00
total thickness	E		3.3*)	4.85*)
bottom components	E1			1.35
top components	E2			2.40
hole keep out x	F1	5.65	5.80	5.95
hole keep out y	F2	5.65	5.80	5.95
hole diameter	G	2.5	2.6	2.7
PCB thickness	H	0.9	1.0	1.1
side keep out	J	0.5		
connector length	K	3.2		
back keep out	L	2.00		
connector radius	M			0.8
notch length	S1	3.9	4.0	4.1
notch keep out	S2	4.2		
notch keep out	S3	4.0		
notch width	T	1.4	1.5	1.6
pad width	V1	0.55	0.60	0.65
pad length	V2	2.40	2.55	2.70
connector width	W	25.55	25.70	25.85
pad edge distance	Y			0.25
number of contacts	N		52	

*) thickness of the current product is 3.3mm,
JEDEC specification allows up to 4.85mm

Dimension	symbol	BASIC dimensions
notch to centerline	D1	3.85
notch to hole	D2	8.25
hole to hole	D3	24.20
pin15 to pin17 pin16 to pin18	D4	4.00
notch to pin17	D5	1.65
notch to pin18	D6	2.05
pin1 to pin15 pin2 to pin16	e1	5.60
pin17 to pin51 pin18 to pin52	e2	13.60
pin to pin	X	0.80

Declaration of Conformity

We

Manufacturer: Swissbit AG
Industriestrasse 4
CH-9552 Bronschhofen
Switzerland

declare under our sole responsibility that the product

Product Type: Solid State Drive (SSD)
Brand Name: SWISSMEMORY™ SSD
Product Series: X-200m
Part Number: SFSAxxxxUxxxxxx-x-xx-xxx-xxx

to which this declaration relates is in conformity with the following directives:

CENELEC EN 55022B :2000 + CISPR22B :2000
CENELEC EN 55024 :2001 + CISPR24 :2001
FCC47 Part 15 Subpart B
2002/96/EC Category 3 (WEEE)

following the provisions of Directive

Electromagnetic compatibility 2004/108/EC
Restriction of the use of certain hazardous substances 2011/65/EU

Swissbit AG, February 2013

Manuela Kögel
Head of Quality Management

9 RoHS and WEEE update from Swissbit

Dear Valued Customer,

We at Swissbit place great value on the environment and thus pay close attention to the diverse aspects of manufacturing environmentally and health friendly products. The European Parliament and the Council of the European Union have published two Directives defining a European standard for environmental protection. This states that Solid State Drives must comply with both Directives in order for them to be sold on the European market:

- **RoHS** – Restriction of Hazardous Substances
- WEEE – Waste Electrical and Electronic Equipment

Swissbit would like to take this opportunity to inform our customers about the measures we have implemented to adapt all our products to the European norms.

What is the WEEE Directive (2002/96/EC)?

The Directive covers the following points:

- Prevention of WEEE
- Recovery, recycling and other measures leading to a minimization of wastage of electronic and electrical equipment
- Improvement in the quality of environmental performance of all operators involved in the EEE life cycle, as well as measures to incorporate those involved at the EEE waste disposal points

What are the key elements?

The WEEE Directive covers the following responsibilities on the part of producers:

Producers must draft a disposal or recovery scheme to dispose of EEE correctly.
Producers must be registered as producers in the country in which they distribute the goods.
They must also supply and publish information about the EEE categories.
Producers are obliged to finance the collection, treatment and disposal of WEEE.

Inclusion of WEEE logos on devices

In reference to the Directive, the WEEE logo must be printed directly on all devices that have sufficient space.
«In exceptional cases where this is necessary because of the size of the product, the symbol of the WEEE Directive shall be printed on the packaging, on the instructions of use and on the warranty»
(WEEE Directive 2002/96/EC)

When does the WEEE Directive take effect?

The Directive came into effect internationally on 13 August, 2005.

What is RoHS (2002/95/EC)?

The goals of the Directive are to:

- Place less of a burden on human health and to protect the environment by restricting the use of hazardous substances in new electrical and electronic devices
- To support the WEEE Directive (see above)

RoHS enforces the restriction of the following 6 hazardous substances in electronic and electrical devices:

- Lead (Pb) – no more than 0.1% by weight in homogeneous materials
- Mercury (Hg) – no more than 0.1% by weight in homogeneous materials
- Cadmium (Cd) – no more than 0.01% by weight in homogeneous materials
- Chromium (Cr6+) – no more than 0.1% by weight in homogeneous materials
- PBB, PBDE – no more than 0.1% by weight in homogeneous materials

Swissbit is obliged to minimize the hazardous substances in the products.

According to part of the Directive, manufacturers are obliged to make a self-declaration for all devices with RoHS. Swissbit carried out intensive tests to comply with the self-declaration. We have also already taken steps to have the analyses of the individual components guaranteed by third-party companies.

Swissbit carried out the following steps during the year with the goal of offering our customers products that are fully compliant with the RoHS Directive.

- **Preparing all far-reaching directives, logistical enhancements and alternatives regarding the full understanding and introduction of the RoHS Directive's standards**
- **Checking the components and raw materials:**
  - Replacing non-RoHS-compliant components and raw materials in the supply chain
  - Cooperating closely with suppliers regarding the certification of all components and raw materials used by Swissbit
- **Modifying the manufacturing processes and procedures**
  - Successfully adapting and optimizing the new management-free integration process in the supply chain
  - Updating existing production procedures and introducing the new procedures to support the integration process and the sorting of materials
- **Carrying out the quality process**
  - Performing detailed function and safety tests to ensure the continuous high quality of the Swissbit product line

When does the RoHS Directive take effect?

As of 1 July, 2006, only new electrical and electronic devices with approved quantities of RoHS will be put on the market.

When will Swissbit be offering RoHS-approved products?

Swissbit's RoHS-approved products are available now. Please contact your Swissbit contact person to find out more about exchanging your existing products for RoHS-compliant devices.

For your attention

We understand that packaging and accessories are not EEE material and are therefore not subject to the WEEE or RoHS Directives.

Contact details:
Swissbit AG
Industriestrasse 4
CH-9552 Bronschhofen
Tel: +41 71 913 03 03 – Fax: +41 71 913 03 15
E-mail: industrial@swissbit.com – Website: www.swissbit.com

10 Part Number Decoder

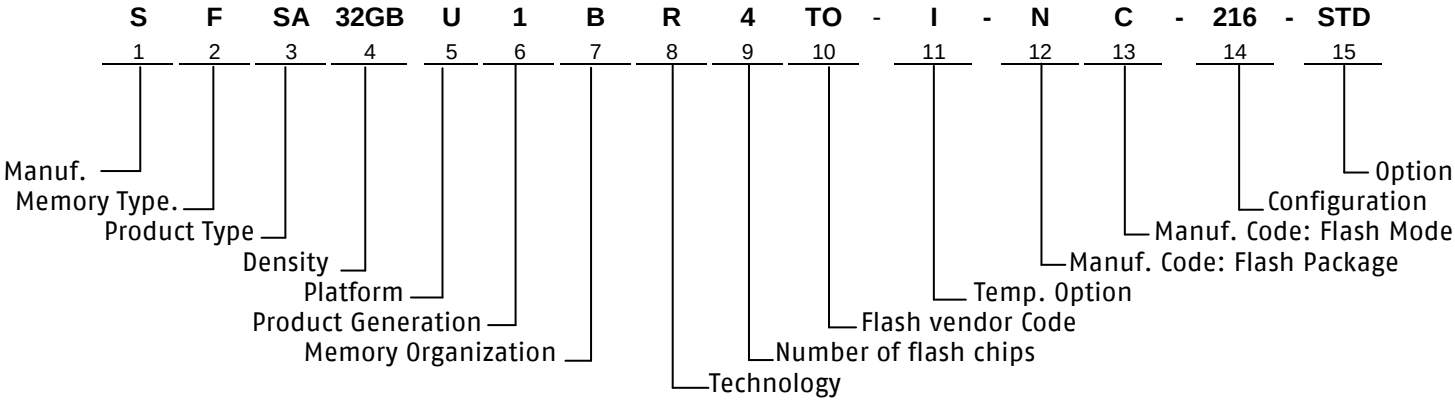

10.1 Manufacturer

Swissbit code	S

10.2 Memory Type

Flash	F

10.3 Product Type

SATA-Interface	SA

10.4 Density

1 GByte	1024
2 GByte	2048
4 GByte	4096
8 GByte	8192
16 GByte	16GB
32 GByte	32GB
64 GByte	64GB

10.5 Platform

Mini-SATA SSD	U

10.6 Product Generation

10.7 Memory Organization

X8	B

10.8 Technology

X-200x Series	R

10.9 Number of Flash Chip

1 Flash	1
2 Flash	2
4 Flash	4

10.10 Flash Code

Toshiba	T0
Samsung	SA
Micron	MT

10.11 Temp. Option

Industrial Temp. Range -40°C – 85°C	I
Standard Temp. Range 0°C – 70°C	C

10.12 DIE Classification

SLC MONO (single die package)	M
SLC DDP (dual die package)	D
SLC QDP (quad die package)	Q
SLC ODP (octal die package)	N

10.13 PIN Mode

	TSOP	LGA
Single nCE & R/nB	S	A
Dual nCE & Dual R/nB	T	B
Quad nCE & Quad R/nB	U	C

10.14 Drive configuration XYZ

X→ Type

Drive Mode	PIO	DMA support	X
Fix	yes	yes	2

Y → Firmware Revision

FW Revision	Y
First	1
Second	2

Z → max. transfer mode

Max PIO Mode / CIS	Z
UDMA6 (MDMA2, PIO4)	6

10.15 Option

Swissbit / Standard	STD

11 Swissbit mSATA SSD Marking specification

11.1 Top view

Industrial Drive

11.1.1 Label content:

- Part number
- Lot Code
- Type code
- Swissbit logo
- CE logo
- FCC logo
- WEEE logo

12 Revision History

Table 70: Document Revision History

Date	Revision	Revision Details
09-May-2011	0.91	First preliminary release
17-August-2011	1.00	Small performance corrections
01-September-2011	1.01	total thickness of current device max. 3.3mm at page 41
31-October-2011	1.10	DASP pin specified, 32GB speed
11-December-2012	1.20	New CE Declaration
07-February-2013	1.30	Added new material 64GB, new description MO-300 full size

Disclaimer:
No part of this document may be copied or reproduced in any form or by any means, or transferred to any third party, without the prior written consent of an authorized representative of Swissbit AG ("SWISSBIT"). The information in this document is subject to change without notice. SWISSBIT assumes no responsibility for any errors or omissions that may appear in this document, and disclaims responsibility for any consequences resulting from the use of the information set forth herein. SWISSBIT makes no commitments to update or to keep current information contained in this document. The products listed in this document are not suitable for use in applications such as, but not limited to, aircraft control systems, aerospace equipment, submarine cables, nuclear reactor control systems and life support systems. Moreover, SWISSBIT does not recommend or approve the use of any of its products in life support devices or systems or in any application where failure could result in injury or death. If a customer wishes to use SWISSBIT products in applications not intended by SWISSBIT, said customer must contact an authorized SWISSBIT representative to determine SWISSBIT willingness to support a given application. The information set forth in this document does not convey any license under the copyrights, patent rights, trademarks or other intellectual property rights claimed and owned by SWISSBIT. The information set forth in this document is considered to be "Proprietary" and "Confidential" property owned by SWISSBIT.

ALL PRODUCTS SOLD BY SWISSBIT ARE COVERED BY THE PROVISIONS APPEARING IN SWISSBIT'S TERMS AND CONDITIONS OF SALE ONLY, INCLUDING THE LIMITATIONS OF LIABILITY, WARRANTY AND INFRINGEMENT PROVISIONS. SWISSBIT MAKES NO WARRANTIES OF ANY KIND, EXPRESS, STATUTORY, IMPLIED OR OTHERWISE, REGARDING INFORMATION SET FORTH HEREIN OR REGARDING THE FREEDOM OF THE DESCRIBED PRODUCTS FROM INTELLECTUAL PROPERTY INFRINGEMENT, AND EXPRESSLY DISCLAIMS ANY SUCH WARRANTIES INCLUDING WITHOUT LIMITATION ANY EXPRESS, STATUTORY OR IMPLIED WARRANTIES OF MERCHANTABILITY OR FITNESS FOR A PARTICULAR PURPOSE.

©2013 SWISSBIT AG All rights reserved.