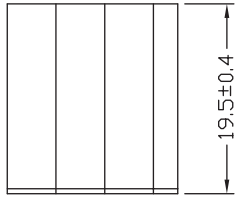

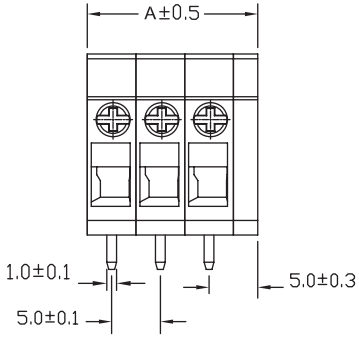

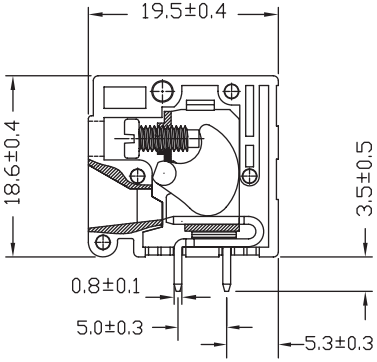

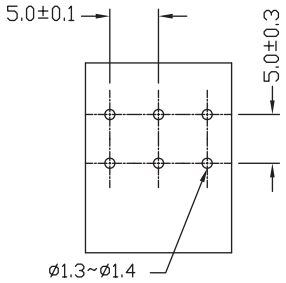

PCB LAYOUT - COMPONENT VIEW

Pitch : 5.00mm (0.197inch)					
Poles	A(mm)	A(inch)	Poles	A(mm)	A(inch)
2	12.50	0.492	15	77.50	3.051
3	17.50	0.689	16	82.50	3.248
4	22.50	0.886	17	87.50	3.445
5	27.50	1.083	18	92.50	3.642
6	32.50	1.280	19	97.50	3.839
7	37.50	1.476	20	102.50	4.035
8	42.50	1.673	21	107.50	4.232
9	47.50	1.870	22	112.50	4.429
10	52.50	2.067	23	117.50	4.626
11	57.50	2.264	24	122.50	4.823
12	62.50	2.461			
13	67.50	2.657			
14	72.50	2.854			

TECHNICAL CHARACTERISTICS

MATERIAL
INSULATOR: PA 66
FLAMABILITY RATING: UL94-V0
COLOR: GREEN
METAL HOUSING: BRASS TIN PLATING
TERMINAL SCREW: STEEL ZINC PLATING
TERMINAL SCREW SLOT TYPE: "+"
WIRE GUARD: STEEL
FLANGES SCREW: STEEL ZINC PLATING M2.6

ENVIRONMENTAL
OPERATING TEMPERATURE: -40 UP TO 105°C
COMPLIANCE: LEAD FREE AND ROHS

ELECTRICAL cULus
CURRENT RATING: 20A
WORKING VOLTAGE: 300VAC
WITHSTANDING VOLTAGE: 2.0KV
CONTACT RESISTANCE: 20 mOhm max

STANDARD
cULus CERTIFIED E315414 / Model number 69112671

MECHANICAL
SOLID WIRE: 30-12 AWG / 0.05-3.3MM²
STRANDED WIRE: 30-12 AWG / 0.05-3.3MM²
TORQUE: 4.0Lb-In / 0.4~0.5Nm

WIRE STRIPE LENGTH: 9MM
PITCH: 5.00MM

PACKAGING: BOX

SERIE 126B

RoHS Compliant

REV	DATE	FILE	BY
G			
F			
E			
D			
C			
B			
A	20-JUN-12	PDF	GG

PROJECTION:

APPROVAL: RJ

GENERAL TOLERANCE
.X = +/_ 0.2
.XX = +/_ 0.15

UNIT: MM
SCALE:
SHEET: 1/1
DRAW: MARVIN

WÜRTH ELEKTRONIK

DESCRIPTION: SERIE 126B - 5,0mm Horizontal Entry with Stamping Clamp

WERI PART NO: 691 126 710 0xx B

SIZE **A4**