REVISIONS			
REV	DESCRIPTION	DATE	APPROVED
01_1	REVISED	4/3/96	

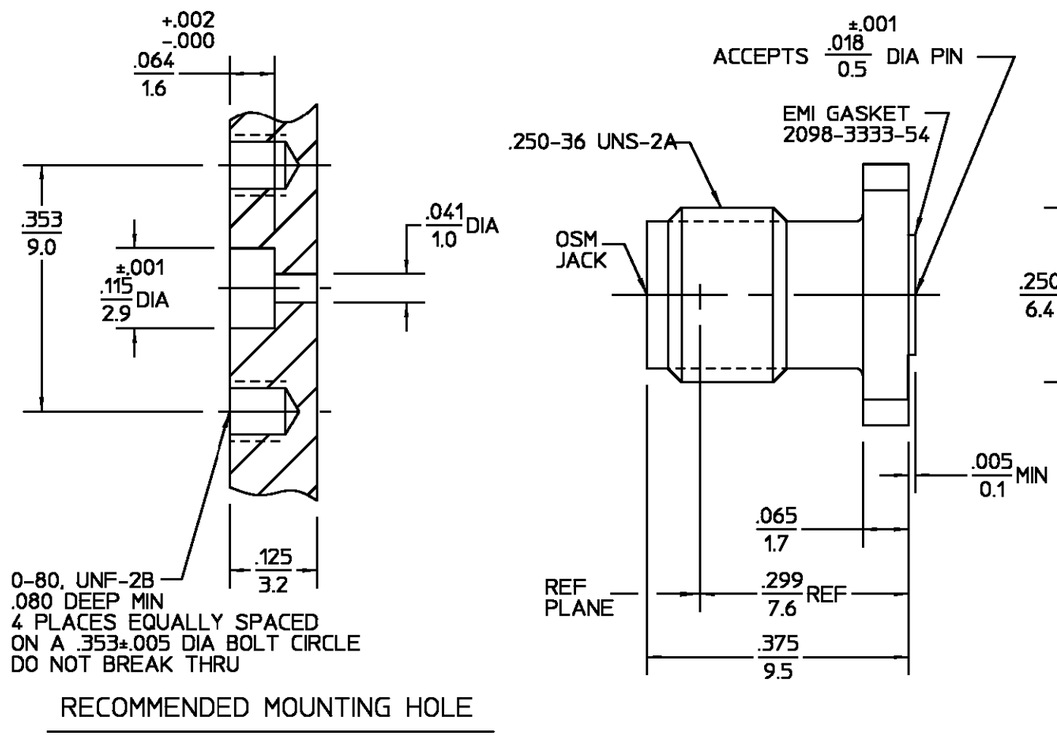

RECOMMENDED MOUNTING HOLE

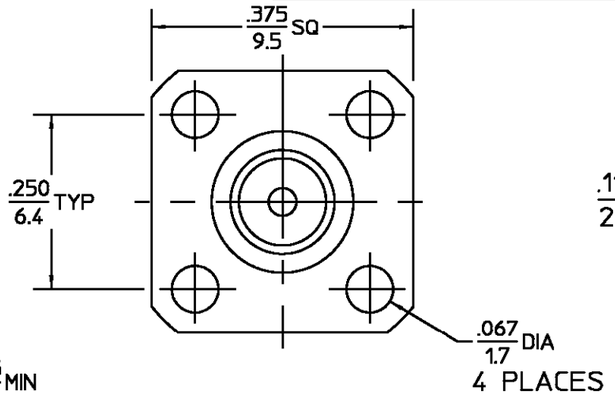

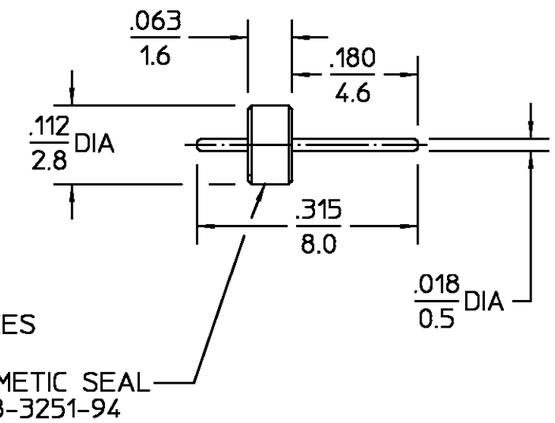

ELECTRICAL	MECHANICAL	ENVIRONMENTAL
Nominal Impedance (Ohms) 50	Interface Dimensions MIL-STD-348A Fig. 310.2	Temperature Rating -65°C To 165°C
Frequency Range (GHz) DC to 18	Recommended Mating Torque N/A	Vibration MIL-STD-202, Method 204, Condition D, 20G's
Volt Rating (VRMS MAX) @ Sea Level 335	Mating Characteristics: Insertion (MAX Lbs) 3.0	Shock MIL-STD-202, Method 107, Condition B
VSWR 1.06 + .01f(GHz)	Withdrawal (MIN Oz) 1.0	Thermal Shock MIL-STD-202, Method 107, Condition B, Except High Temp 115°C
Insertion Loss (dB MAX) .04 $\sqrt{f}$ (GHz)	Force to Engage and Disengage (In/Lbs MAX) 2.0	Moisture Resistance MIL-STD-202, Method 106
RF Leakage (dB MIN) -(100-f(GHz))	Center Contact Captivation Axial (Lbs) 6.0	Corrosion - MIL-STD-202, Method 101, Condition B, 5% salt spray
Corona, 70,000 Ft (VRMS MIN) 333	Radial (In/Oz) N/A	
Dielectric Withstanding Voltage (VRMS MIN) @ Sea Level 1000	Weight (Grams) TBD	
Contact Resistance (Milliohms MAX) Center Contact 10.0		
Outer Contact 2.0		
RF High Potential @ Sea Level (VRMS MIN @ 5 MHz) 667		
I.R.(Megohms MIN) 5,000		

COMPONENT	MATERIAL	FINISH
HOUSING	STAINLESS STEEL PER ASTM-A484 AND ASTM-A582, TYPE 303	PASSIVATE PER ASTM-A380
DIELECTRIC	TFE FLUOROCARBON PER ASTM-D-1457	N/A
CENTER CONTACT	BERYLLIUM COPPER PER ASTM-B196, ALLOY C17300, CONDITION H	GOLD PLATE PER MIL-G-45204
CONTACT EXT. BUSHING	IRON-NICKEL-COBALT ALLOY PER MIL-I-23011 CLASS 1 (KOVAR)	GOLD PLATE PER MIL-G-45204
GASKET	CONDUCTIVE ELASTOMERS PER MIL-G-83528	N/A
HERMETIC SEAL	GLASS BEAD	N/A

UNLESS OTHERWISE SPECIFIED DIMENSIONS ARE IN INCHES
TOLERANCE ON
FRAC. ± 1/64 DEC. ±.005 ANGLES ± 1°

DRAWN BY M.Y. DATE 7-22-91
CHECKED BY J.C. Mehn 7/24/91
APP'D BY 7/24/91

AMP

AMP Incorporated
140 Fourth Avenue
Waltham, MA 02451-7599

These drawings and specifications are the property of M/A-COM Incorporated and shall not be reproduced or copied or used in whole or in part as the basis for the manufacture or sale of item(s) without written permission.

USE ASS'Y PROCEDURE

NO. A.P. N/A

TITLE
OSM 4 HOLE FLANGE MOUNT JACK RECEPTACLE - FIELD REPLACEABLE

SIZE	CODE IDENT NO.		REV
B	26805	2052-3509-02	01_1

SCALE 5:1 SHEET 1 OF 1

CUSTOMER DRAWING

AMP PART # 1052697-1
SHEET 1 OF 1 REV A