THIS DRAWING IS UNPUBLISHED. RELEASED FOR PUBLICATION 2005
© COPYRIGHT 2005 BY TYCO ELECTRONICS CORPORATION. ALL RIGHTS RESERVED.

LOC	DIST
IS	–

REVISIONS

P	LTR	DESCRIPTION	DATE	DWN	APVD
	51	First Issue	11APR2008	MG	DB
	A	Released to production	19JUN2008	MG	DB

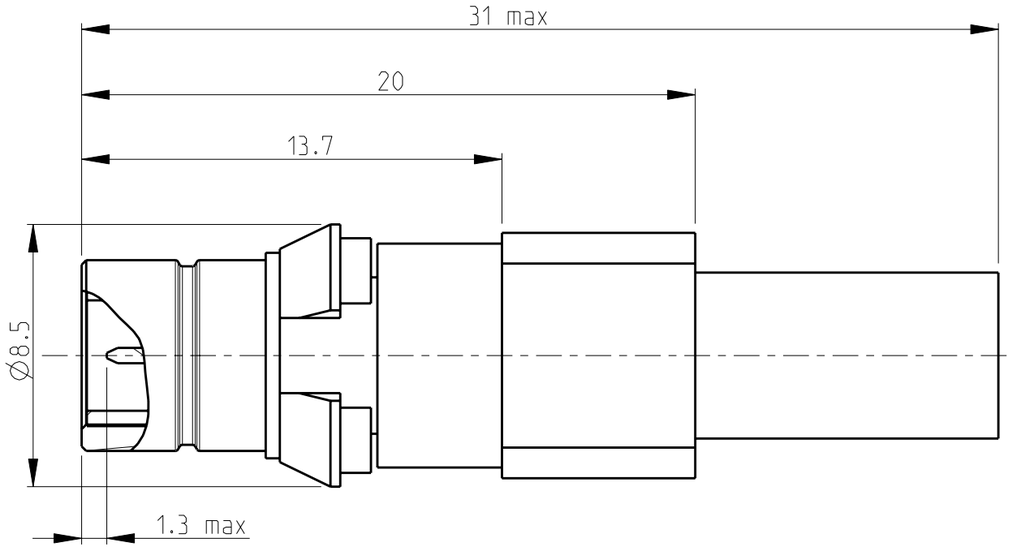

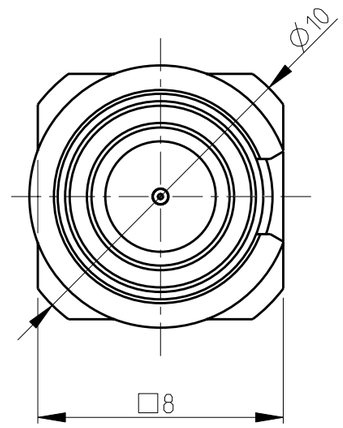

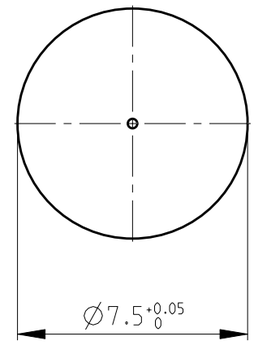

Panel Cutout Dimensions

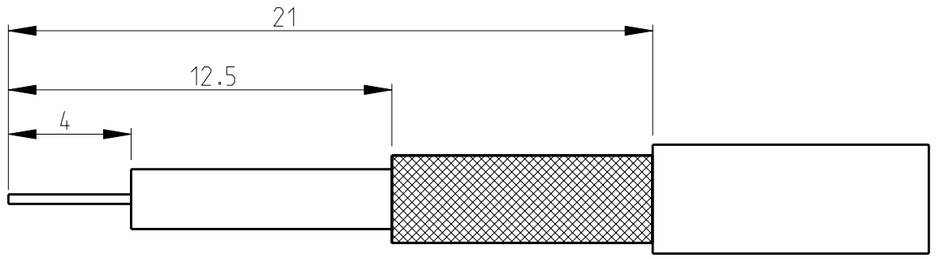

1 Interface according to BS 9210 F0022
Coupling Type: push pull, snap on

2 DIN ISO 8015; DIN ISO 2768-mH

3) Half crimp version : Center conductor captivated. Push the cable with force, until the center contact reach the interface dimension according to the drawing.

Outer conductor crimping with tool PN 354940-1 and Die Set PN 58436-4 (HEX 4.52)

4) Cable Type: BT3002/TZC 75024 ext. DIA 3.55±0.15
BT Reference HDC P43/5GTIS

1:1

PART NR	PIECES	ITEM	DESCRIPTION	MATERIAL	PLATING
619359-1 1	1	3	CENTER CONDUCTOR	Bronze	Gold
	1	2	DIELECTRIC	PTFE/PA	none
	1	1	OUTER CONDUCTOR	Brass	Gold

THIS DRAWING IS A CONTROLLED DOCUMENT FOR TYCO ELECTRONICS CORPORATION IT IS SUBJECT TO CHANGE AND THE CONTROLLING ENGINEERING ORGANIZATION SHOULD BE CONTACTED FOR THE LATEST REVISION.

DIMENSIONS: mm

TOLERANCES UNLESS OTHERWISE SPECIFIED: 2
0 PLC ±-
1 PLC ±-
2 PLC ±-
3 PLC ±-
4 PLC ±-
ANGLES ±1°

MATERIAL –
FINISH –

DWN M.Grazioli 03Apr2008
CHK D. Bozzer 03Apr2008
APVD – –
PRODUCT SPEC –
APPLICATION SPEC –
WEIGHT –

Tyco Electronics
tyco Electronics
Switzerland - Lugano

NAME BT43 jack Cable crimp BT3200 75 ohm

SIZE	CAGE CODE	DRAWING NO	RESTRICTED TO
A3	00779	C-619359	–

CUSTOMER DRAWING | SCALE 5:1 | SHEET 1 OF 1 | REV A

AMP 1470-19 REV 31MAR2000