THIS DRAWING IS UNPUBLISHED. RELEASED FOR PUBLICATION – , – .
© COPYRIGHT – By – ALL RIGHTS RESERVED.

LOC	DIST
E	B

REVISIONS

P	LTR	DESCRIPTION	DATE	DWN	APVD
	B1	REVISED PER ECO–11–005150	21MAR11	RK	HMR

NOTES:

1. ELECTRICAL DATA: CONTACT RESISTANCE: 10 mOhm MAX
   INSULATION RESISTANCE: 100 MOhm MIN at 500VDC
   CURRENT RATING: 5 AMPS
   BREAKDOWN VOLTAGE: 500 VAC MIN PER MINUTE
2. ENVIRONMENTAL: OPERATING TEMPERATURE: –20°C TO +80°C
   SEALING REQUIREMENTS: IP67
3. PROD SPEC: 108–3641
4. PACKAGING: 107–3334
5. FOR TECHNICAL DATA REFER TO YOUR LOCAL TE CONNECTIVITY SALES OFFICE
6. ALL DIMENSIONS ARE NOMINAL FOR REFERENCE ONLY UNLESS OTHERWISE STATED

ITEM	DESCRIPTION	MATERIAL	FINISH/COLOUR	QTY
1	SCREW NUT	ZINC DIE CAST	2.5µm NICKEL PLATED	1
2	CONNECTOR BODY	POLYURETHANE	BLACK	1
3	SOCKET CONTACT	BRASS	0.15µm GOLD PLATED OVER NICKEL	4
4	4 CORE CABLE (CORES 22AWG TO UL2464)	PVC JACKET UV RESISTANT	BLACK	1
5	'O' RING	VITON	GREEN	1

PIN ASSIGNMENTS
FRONT VIEW

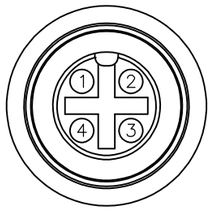

PIN	WIRE COLOUR
4	BLACK
3	BLUE
2	WHITE
1	BROWN

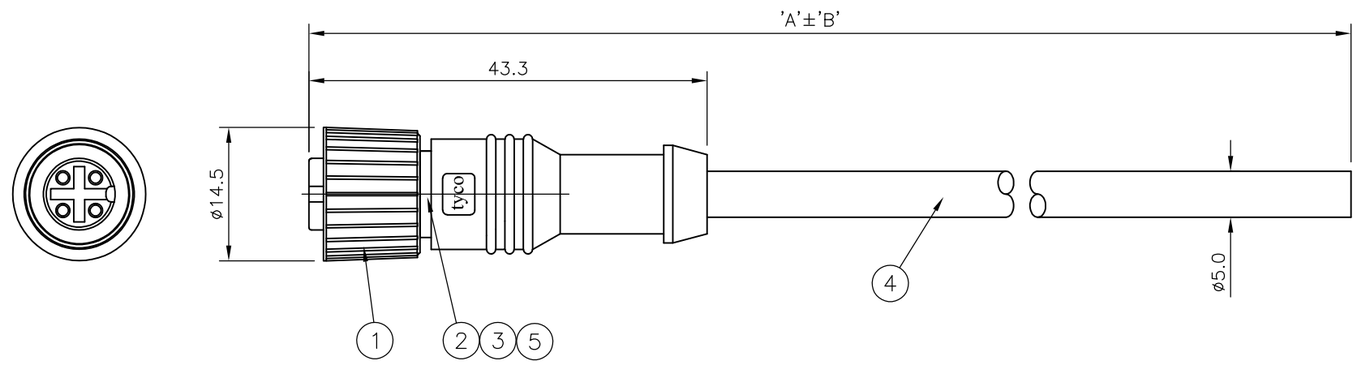

DIM A	TOL 'B'	DESCRIPTION	PART NUMBER
10000	500 mm	M12 STRAIGHT FEMALE CONNECTOR 10.0m CABLE	1838244–5
7000	350 mm	M12 STRAIGHT FEMALE CONNECTOR 7.0m CABLE	1838244–4
5000	250 mm	M12 STRAIGHT FEMALE CONNECTOR 5.0m CABLE	1838244–3
3000	150 mm	M12 STRAIGHT FEMALE CONNECTOR 3.0m CABLE	1838244–2
2000	100 mm	M12 STRAIGHT FEMALE CONNECTOR 2.0m CABLE	1838244–1

THIS DRAWING IS A CONTROLLED DOCUMENT.

DIMENSIONS: mm

TOLERANCES UNLESS OTHERWISE SPECIFIED:
0 PLC ± –
1 PLC ± –
2 PLC ± –
3 PLC ± –
4 PLC ± –
ANGLES ± –

MATERIAL –
FINISH –

DWN H M RAGHAVENDRA 22AUG05
CHK F.WHEELER–KING 15DEC05
APVD F.WHEELER–KING 15DEC05
PRODUCT SPEC —
APPLICATION SPEC —
WEIGHT —

TE Connectivity

NAME
M12 STRAIGHT FEMALE CONNECTOR
4 POSITION, PVC CABLE

SIZE	CAGE CODE	DRAWING NO	RESTRICTED TO
A3	00779	C–1838244	—

CUSTOMER DRAWING | SCALE NTS | SHEET 1 OF 1 | REV B1