1779

PART NO.	ENG. NO.	
02-06-7103	1779-(P909)L	
02-06-7104	1779-(P228)L	

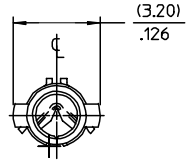

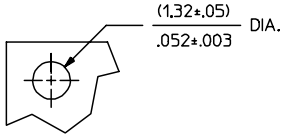

RECOMMENDED HOLE DIA. FOR
(1.57)/.062 THICK P.C. BOARD

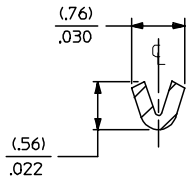

SECT. "B-B"

SCALE:20X

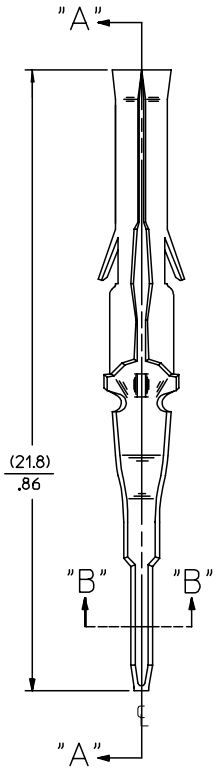

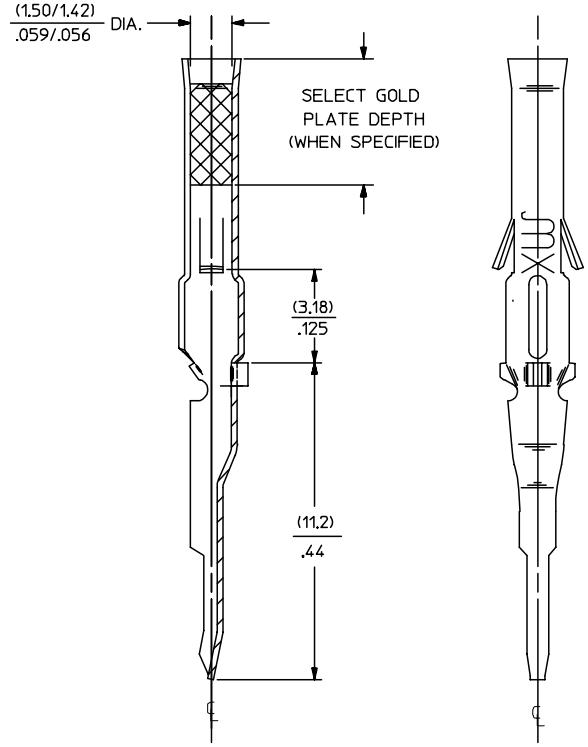

SECT. "A-A"

LEGEND

1779-(****)*-*

- P=PREPLATE, BLANK=POSTPLATE
- FINISH CODE
- FORM: L=LOOSE
- MATERIAL: BLANK=BRASS (0.20)/.008 THICK

NOTES:

1. MATERIAL: BRASS
2. FINISH:
   - 909 HOT TIN DIP* (.00254)/.000100 MIN.
   - 228 SELECT GOLD PLATE (.00075)/.000030 MIN. IN CONTACT AREA, SELECT TIN* (.00250)/.000100 MIN. IN TAIL AREA, OVER (.00125)/.000050 MIN. NICKEL OVERALL.
   - * THE PRIMARY SHIPPING CARTON WILL BE LABELED, "COMPLIANT TO RoHS DIRECTIVE 2002/95/EC AND ANNEX II OF DIRECTIVE 2000/53/EC", AND CARTONS WITHOUT THIS LABEL MAY CONTAIN PRODUCT WITH TIN-LEAD.
3. PRODUCT SPECIFICATION: PS-02-06.
4. PACKAGING INFORMATION: NOT AVAILABLE
5. TERMINAL FOR USE WITH (1.57)/.062 SERIES HOUSINGS.

OBSOLETE P/N
EC NO: DESCRIPTION
DRWN: JLOWE 2005/06/13
CHKD: ADERR 2005/06/16
APPR: FSMITH 2005/06/20
REV AA

QUALITY SYMBOLS: ▼ = 0; (C) = 0

GENERAL TOLERANCES (UNLESS SPECIFIED)	mm	INCH
4 PLACES	± ---	± ---
3 PLACES	± ---	± .005
2 PLACES	± 0.13	± .010
1 PLACE	± 0.25	± ---
ANGULAR ±1/2°		

DRAFT WHERE APPLICABLE
MUST REMAIN WITHIN DIMENSIONS

SCALE	8:1
DESIGN UNITS	INCH
DIMENSION STYLE	MM/IN
DRAWN BY	GEP
DATE	1987/11/02
CHECKED BY	RW
DATE	1987/11/02
APPROVED BY	RAS
DATE	1987/11/02
MATERIAL NO.	SEE CHART
DOCUMENT NO.	SD-1779-*
SHEET NO.	1 OF 1

THIRD ANGLE PROJECTION

REVISE ON CAD ONLY

TITLE: TERMINAL, FEMALE (1.57)/.062 DIA P.C. TAIL TYPE

MOLEX INCORPORATED

THIS DRAWING CONTAINS INFORMATION THAT IS PROPRIETARY TO MOLEX INCORPORATED AND SHOULD NOT BE USED WITHOUT WRITTEN PERMISSION

C

tb_frame_C_P_ME_T
Rev. C 2002/05/05