Feb.1.2018 Copyright 2018 HIROSE ELECTRIC CO., LTD. All Rights Reserved.

	COUNT	DESCRIPTION OF REVISIONS	BY	CHKD	DATE		COUNT	DESCRIPTION OF REVISIONS	BY	CHKD	DATE
△					. .	△					. .
△					. .	△					. .
△					. .	△					. .

MAIN BODY

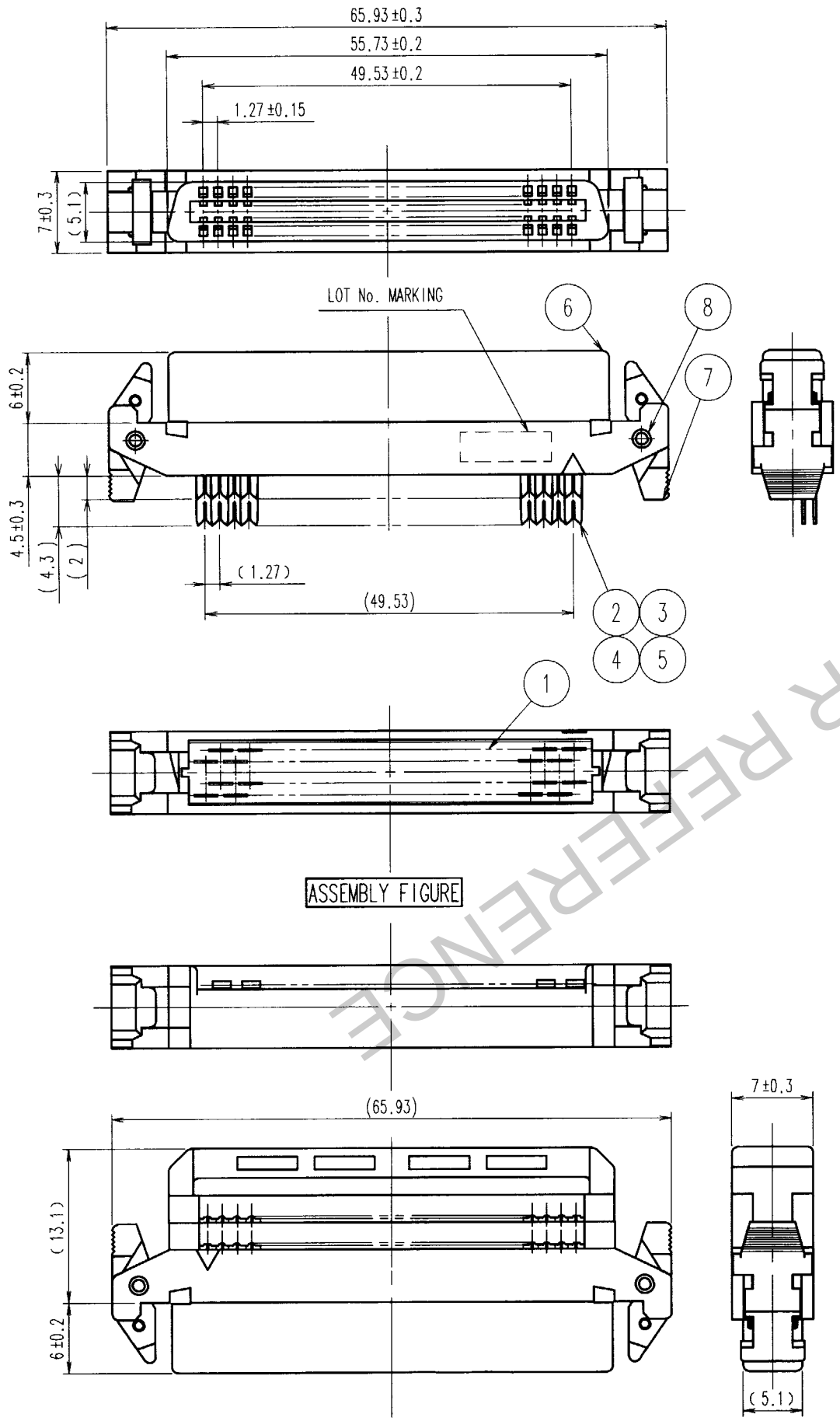

ASSEMBLY FIGURE

PROTECTOR (A)

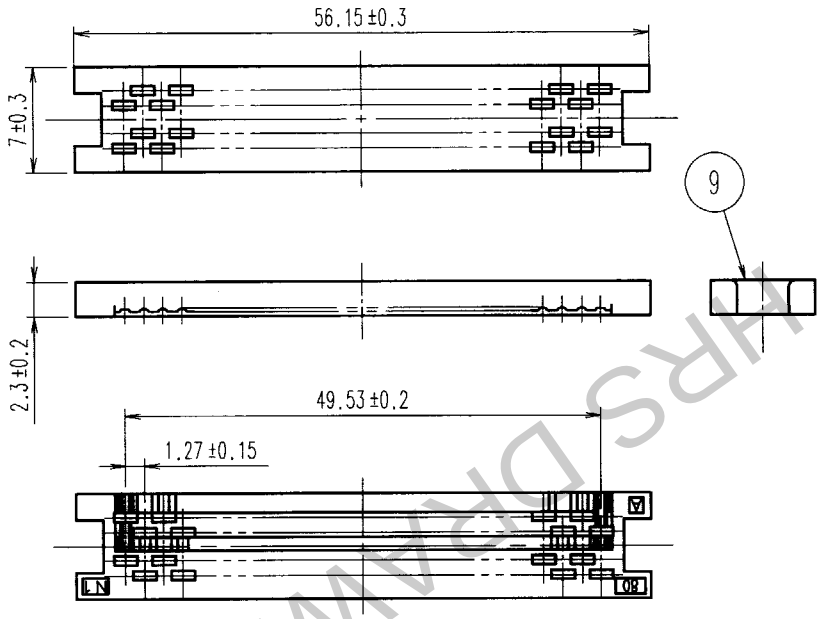

PROTECTOR (B)

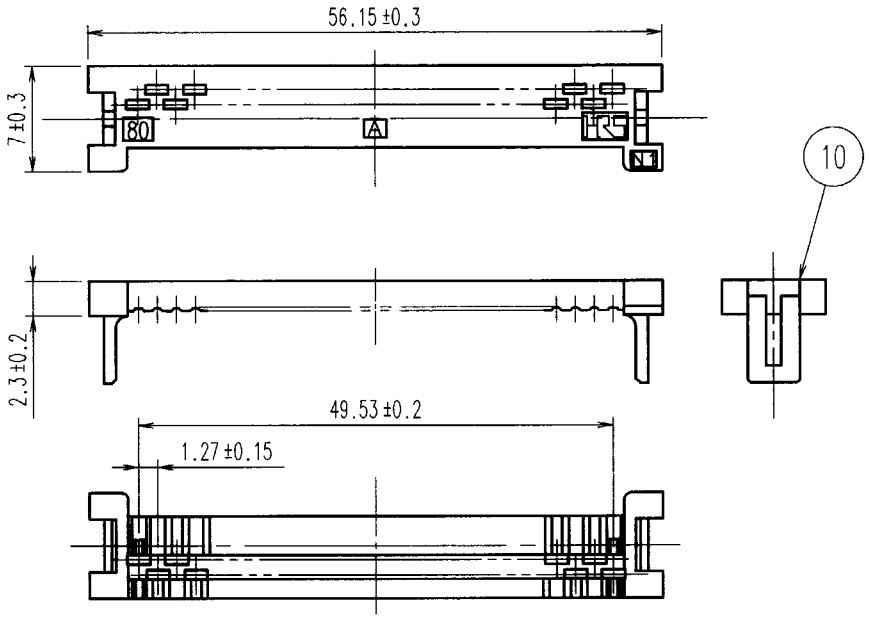

CABLE CLAMP

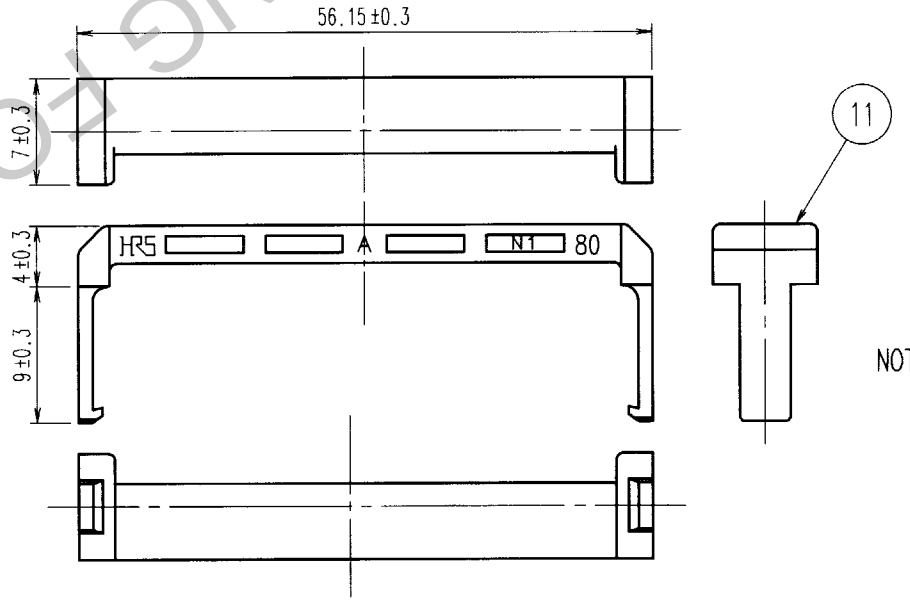

NOTE COMPONENTS OF REF. NO.9 ~ 11 ARE APPENDED PRODUCTS.

NO.	MATERIAL	FINISH, REMARKS	NO.	MATERIAL	FINISH, REMARKS
2~5	PHOSPHOR BRONZE	CONTACT AREA:GOLD PLATED(FLASH) OVER NICKEL THE OTHER AREA:NICKEL PLATED	11	PA	BLACK UL94V-0
			9,10	PBT	BLACK UL94V-0
			8	STAINLESS STEEL	
1	PBT	BLACK UL94V-0	6,7	PBT	BLACK UL94V-0

CODE NO.(OLD)	DRAWN	DESIGNED	CHECKED	APPROVED	RELEASED
CL	K.NAKAMURA 02.02.19	H.Yamaguchi 02·02·20	H.Okawa 02·02·20	J.Fujimura 02·02·20	. .

SCALE FREE	DRAWING NO. EDC3-152002	PART NO. FX2BN1-80SA-1.27R
UNITS mm	HRS HIROSE ELECTRIC CO., LTD	CODE NO. CL572-0995-2 1/1

TO
PCK

HRS DRAWING FOR REFERENCE

FORM NO.229