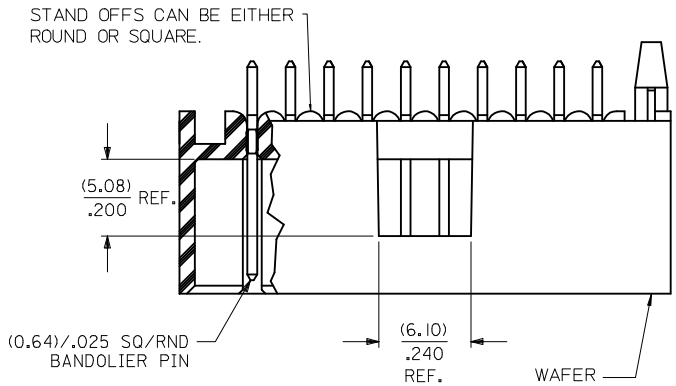

NOTES:
1. MATERIAL: WAFER - GLASS FILLED LIQUID CRYSTAL POLYMER; UL 94V-0; COLOR: BLACK. PIN: COPPER ALLOY.
2. PLATING: TIN — TIN(Sn) ALLOY OVER ENTIRE PIN: THICKNESS = (3.81 MICROMETER)/ 150 MICROINCH MINIMUM, NICKEL (Ni) UNDERPLATE OVER ENTIRE PIN.
   15 GOLD — SELECTIVE GOLD (Au) IN THE CONTACT AREA: THICKNESS = (0.38MICROMETER)/ 15 MICROINCH MINIMUM; SELECTIVE TIN (Sn) ALLOY IN THE PC TAIL AREA: THICKNESS = (1.91 MICROMETER)/ 75 MICROINCH MINIMUM; NICKEL (Ni) UNDERPLATE OVER ENTIRE PIN.
   30 GOLD — SELECTIVER GOLD (Au) IN THE CONTACT AREA: THICKNESS = (0.76 MICROMETER)/ 30 MICROINCH MINIMUM; SELECTIVE TIN (Sn) ALLOY IN THE PC TAIL AREA: THICKNESS = (1.91 MICROMETER)/ 75 MICROINCH MINIMUM; NICKEL (Ni) UNDERPLATE OVER ENTIRE PIN.
   * THE PRIMARY SHIPPING CARTON WILL BE LABELED "COMPLIANT TO RoHS DIRECTIVE 2002/95/EC AND ELV ANNEX II OF DIRECTIVE 2000/53/EC". CARTONS WITHOUT THIS LABEL MAY CONTAIN PRODUCT WITH LEAD.
3. PRODUCT SPECIFICATION: PS-70567.
4. PACKAGING: SEE CHARTS
5. PIN PUSHOUT FORCE: 4 LS. MIN. IN DIRECTION INDICATED.
6. FOR ILLUSTRATION PURPOSES, 20 (DUAL 10) CIRCUIT SIZE IS SHOWN.
7. PINS MUST MEET SOLDERABILITY SPEC. SMES-152, EXCEPT VOIDS ARE PERMISSIBLE AT BANDOLIER PIN FAYING SURFACE. (APPROX. (0.64)/.025 LNG X (0.15)/.006 WD. REF.) - 2 LOCATIONS
8. NO FEATURES WHICH RISE ABOVE THE PCB SURFACE ALLOWED IN THIS AREA.
9. THIS PART CONFORMS TO CLASS B REQUIREMENTS OF COSMETIC SPEC PS-45499-002.

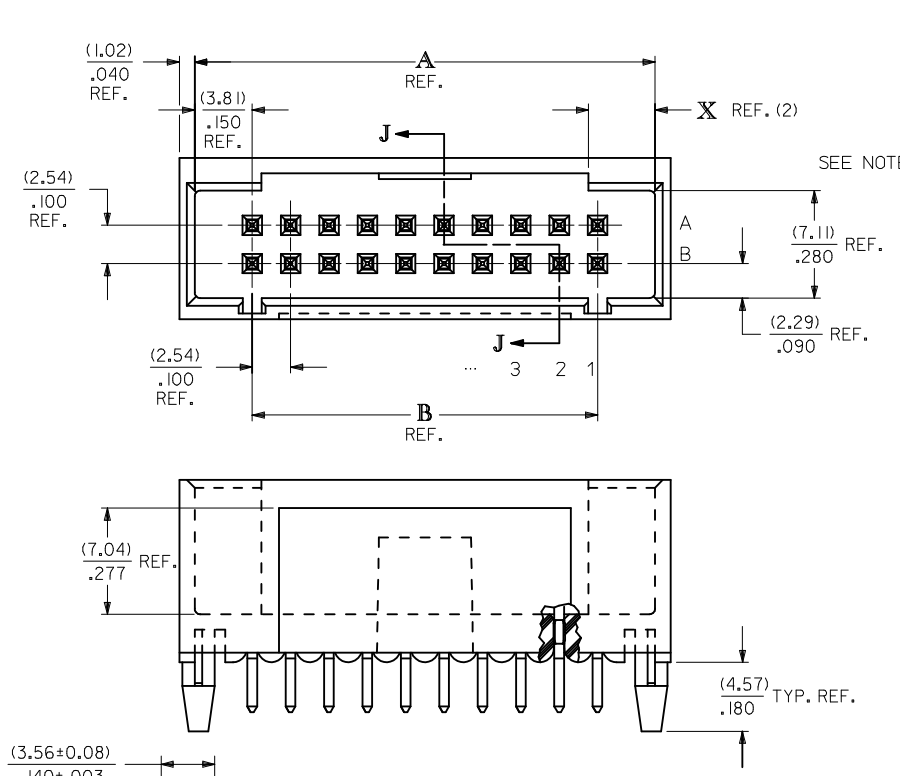

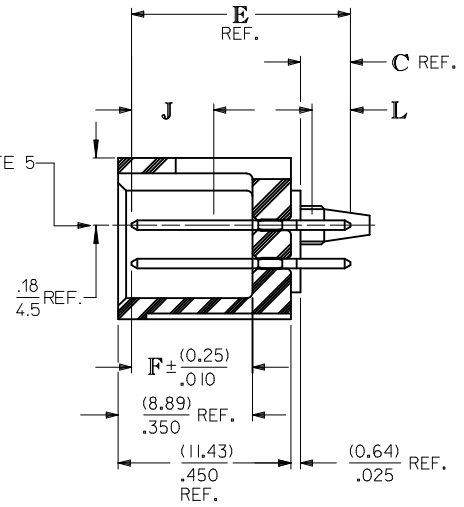

SECTION J-J

CKT. SIZE	DIM. A REF. (MM)	DIM. A REF. INCH	DIM. B REF. (MM)	DIM. B REF. INCH	DIM. X REF. (MM)	DIM. X REF. INCH
6	(12.70)	.500	(5.08)	.200	(3.18)	.125
8	(15.24)	.600	(7.62)	.300	(4.42)	.174
10	(17.78)	.700	(10.16)	.400	(4.42)	.174
12	(20.32)	.800	(12.70)	.500	(4.42)	.174
14	(22.86)	.900	(15.24)	.600	(4.42)	.174
16	(25.40)	1.000	(17.78)	.700	(4.42)	.174
18	(27.94)	1.100	(20.32)	.800	(4.42)	.174
20	(30.48)	1.200	(22.86)	.900	(4.42)	.174
22	(33.02)	1.300	(25.40)	1.000	(4.42)	.174
24	(35.56)	1.400	(27.94)	1.100	(4.42)	.174
26	(38.10)	1.500	(30.48)	1.200	(4.42)	.174
28	(40.64)	1.600	(33.02)	1.300	(4.42)	.174
30	(43.18)	1.700	(35.56)	1.400	(4.42)	.174
32	(45.72)	1.800	(38.10)	1.500	(4.42)	.174
34	(48.26)	1.900	(40.64)	1.600	(4.42)	.174
36	(50.80)	2.000	(43.18)	1.700	(4.42)	.174
38	(53.34)	2.100	(45.72)	1.800	(4.42)	.174
40	(55.88)	2.200	(48.26)	1.900	(4.42)	.174
42	(58.42)	2.300	(50.80)	2.000	(4.42)	.174
44	(60.96)	2.400	(53.34)	2.100	(4.42)	.174
46	(63.50)	2.500	(55.88)	2.200	(4.42)	.174
48	(66.04)	2.600	(58.42)	2.300	(4.42)	.174
50	(68.58)	2.700	(60.96)	2.400	(4.42)	.174
52	(71.12)	2.800	(63.50)	2.500	(4.42)	.174
54	(73.66)	2.900	(66.04)	2.600	(4.42)	.174
56	(76.20)	3.000	(68.58)	2.700	(4.42)	.174
58	(78.74)	3.100	(71.12)	2.800	(4.42)	.174
60	(81.28)	3.200	(73.66)	2.900	(4.42)	.174
62	(83.82)	3.300	(76.20)	3.000	(4.42)	.174
64	(86.36)	3.400	(78.74)	3.100	(4.42)	.174
66	(88.90)	3.500	(81.28)	3.200	(4.42)	.174
68	(91.44)	3.600	(83.82)	3.300	(4.42)	.174
70	(93.98)	3.700	(86.36)	3.400	(4.42)	.174
72	(96.52)	3.800	(88.90)	3.500	(4.42)	.174

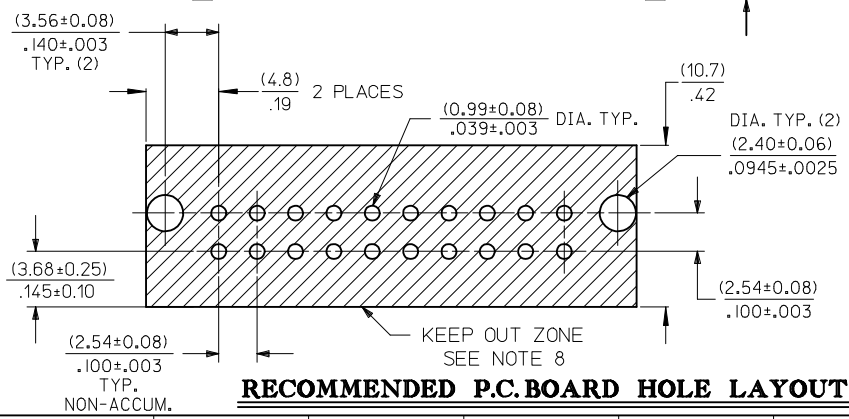

RECOMMENDED P.C. BOARD HOLE LAYOUT

REV	DESCRIPTION
2	G
1	H
SHT	REV

MODIFIED NOTES
EC NO: UCP2009-0336
DRWN:JKLOSTEMEIER 2008/09/23
CHKD:JBELL 2008/09/24
APPR:FSMITH 2008/09/25
H

QUALITY SYMBOLS
▼=0
▽C=0

GENERAL TOLERANCES (UNLESS SPECIFIED)

	mm	INCH
4 PLACES	± ---	± ---
3 PLACES	± ---	± .005
2 PLACES	± 0.13	± .01
1 PLACE	± 0.25	± ---
ANGULAR ±1/2°		

DRAFT WHERE APPLICABLE MUST REMAIN WITHIN DIMENSIONS

DIMENSION STYLE: MM/IN
SCALE: 4:1
DESIGN UNITS: INCH
THIRD ANGLE PROJECTION

DRAWN BY: SMR DATE: 1993/11/10
CHECKED BY: SMR DATE: 1993/11/10
APPROVED BY DATE

TITLE: SALES ASSY - DUAL ROW SHROUDED WAFER/HI TEMP .25SQ/RND PINS .100 GRID

molex MOLEX INCORPORATED

MATERIAL NO.: SEE TABLE
DOCUMENT NO.: SDA-70568-****
SHEET NO.: 1 OF 2
SIZE: C

THIS DRAWING CONTAINS INFORMATION THAT IS PROPRIETARY TO MOLEX INCORPORATED AND SHOULD NOT BE USED WITHOUT WRITTEN PERMISSION

ENGINEERING NUMBER A-70568	RELEASE FOR MANUFACTURE			C REF.		E REF.	F ± (0.25) .010				CONNECTOR END PLATING TYPE		J MINIMUM LENGTH	P.C. BOARD END PLATING TYPE		L MINIMUM LENGTH	SEE PACK INFORMA. DRAWING PK-70873
-0001/0034	R.F.M.			(3.30) .130		(14.48) .570	(8.00) .315				TIN		OVER-ALL	TIN		OVER-ALL	-0018
-0035/-0068	R.F.M.			(3.30) .130		(14.48) .570	(8.00) .315				15 GOLD		(5.08) .200	TIN		(3.56) .140	-0018
-0069/-0102	R.F.M.			(3.30) .130		(14.48) .570	(8.00) .315				30 GOLD		(5.08) .200	TIN		(3.56) .140	-0018
-0103/-0136																	
-0137/-0170																	
-0171/-0204																	
-0205/-0238																	

CKTS	EDP NUMBER	ENG NUMBER	EDP NUMBER	ENG NUMBER	EDP NUMBER	ENG NUMBER	EDP NUMBER	ENG NUMBER	EDP NUMBER	ENG NUMBER	EDP NUMBER	ENG NUMBER	EDP NUMBER	ENG NUMBER	CKTS
06	15-47-7506	A-70568-0001	15-47-7606	A-70568-0035	15-47-7706	A-70568-0069		A-70568-0103		A-70568-0137		A-70568-0171		A-70568-0205	06
08	15-47-7508	A-70568-0002	15-47-7608	A-70568-0036	15-47-7708	A-70568-0070		A-70568-0104		A-70568-0138		A-70568-0172		A-70568-0206	08
10	15-47-7510	A-70568-0003	15-47-7610	A-70568-0037	15-47-7710	A-70568-0071		A-70568-0105		A-70568-0139		A-70568-0173		A-70568-0207	10
12	15-47-7512	A-70568-0004	15-47-7612	A-70568-0038	15-47-7712	A-70568-0072		A-70568-0106		A-70568-0140		A-70568-0174		A-70568-0208	12
14	15-47-7514	A-70568-0005	15-47-7614	A-70568-0039	15-47-7714	A-70568-0073		A-70568-0107		A-70568-0141		A-70568-0175		A-70568-0209	14
16	15-47-7516	A-70568-0006	15-47-7616	A-70568-0040	15-47-7716	A-70568-0074		A-70568-0108		A-70568-0142		A-70568-0176		A-70568-0210	16
18	15-47-7518	A-70568-0007	15-47-7618	A-70568-0041	15-47-7718	A-70568-0075		A-70568-0109		A-70568-0143		A-70568-0177		A-70568-0211	18
20	15-47-7520	A-70568-0008	15-47-7620	A-70568-0042	15-47-7720	A-70568-0076		A-70568-0110		A-70568-0144		A-70568-0178		A-70568-0212	20
22	15-47-7522	A-70568-0009	15-47-7622	A-70568-0043	15-47-7722	A-70568-0077		A-70568-0111		A-70568-0145		A-70568-0179		A-70568-0213	22
24	15-47-7524	A-70568-0010	15-47-7624	A-70568-0044	15-47-7724	A-70568-0078		A-70568-0112		A-70568-0146		A-70568-0180		A-70568-0214	24
26	15-47-7526	A-70568-0011	15-47-7626	A-70568-0045	15-47-7726	A-70568-0079		A-70568-0113		A-70568-0147		A-70568-0181		A-70568-0215	26
28	15-47-7528	A-70568-0012	15-47-7628	A-70568-0046	15-47-7728	A-70568-0080		A-70568-0114		A-70568-0148		A-70568-0182		A-70568-0216	28
30	15-47-7530	A-70568-0013	15-47-7630	A-70568-0047	15-47-7730	A-70568-0081		A-70568-0115		A-70568-0149		A-70568-0183		A-70568-0217	30
32	15-47-7532	A-70568-0014	15-47-7632	A-70568-0048	15-47-7732	A-70568-0082		A-70568-0116		A-70568-0150		A-70568-0184		A-70568-0218	32
34	15-47-7534	A-70568-0015	15-47-7634	A-70568-0049	15-47-7734	A-70568-0083		A-70568-0117		A-70568-0151		A-70568-0185		A-70568-0219	34
36	15-47-7536	A-70568-0016	15-47-7636	A-70568-0050	15-47-7736	A-70568-0084		A-70568-0118		A-70568-0152		A-70568-0186		A-70568-0220	36
38	15-47-7538	A-70568-0017	15-47-7638	A-70568-0051	15-47-7738	A-70568-0085		A-70568-0119		A-70568-0153		A-70568-0187		A-70568-0221	38
40	15-47-7540	A-70568-0018	15-47-7640	A-70568-0052	15-47-7740	A-70568-0086		A-70568-0120		A-70568-0154		A-70568-0188		A-70568-0222	40
42	15-47-7542	A-70568-0019	15-47-7642	A-70568-0053	15-47-7742	A-70568-0087		A-70568-0121		A-70568-0155		A-70568-0189		A-70568-0223	42
44	15-47-7544	A-70568-0020	15-47-7644	A-70568-0054	15-47-7744	A-70568-0088		A-70568-0122		A-70568-0156		A-70568-0190		A-70568-0224	44
46	15-47-7546	A-70568-0021	15-47-7646	A-70568-0055	15-47-7746	A-70568-0089		A-70568-0123		A-70568-0157		A-70568-0191		A-70568-0225	46
48	15-47-7548	A-70568-0022	15-47-7648	A-70568-0056	15-47-7748	A-70568-0090		A-70568-0124		A-70568-0158		A-70568-0192		A-70568-0226	48
50	15-47-7550	A-70568-0023	15-47-7650	A-70568-0057	15-47-7750	A-70568-0091		A-70568-0125		A-70568-0159		A-70568-0193		A-70568-0227	50
52	15-47-7552	A-70568-0024	15-47-7652	A-70568-0058	15-47-7752	A-70568-0092		A-70568-0126		A-70568-0160		A-70568-0194		A-70568-0228	52
54	15-47-7554	A-70568-0025	15-47-7654	A-70568-0059	15-47-7754	A-70568-0093		A-70568-0127		A-70568-0161		A-70568-0195		A-70568-0229	54
56	15-47-7556	A-70568-0026	15-47-7656	A-70568-0060	15-47-7756	A-70568-0094		A-70568-0128		A-70568-0162		A-70568-0196		A-70568-0230	56
58	15-47-7558	A-70568-0027	15-47-7658	A-70568-0061	15-47-7758	A-70568-0095		A-70568-0129		A-70568-0163		A-70568-0197		A-70568-0231	58
60	15-47-7560	A-70568-0028	15-47-7660	A-70568-0062	15-47-7760	A-70568-0096		A-70568-0130		A-70568-0164		A-70568-0198		A-70568-0232	60
62	15-47-7562	A-70568-0029	15-47-7662	A-70568-0063	15-47-7762	A-70568-0097		A-70568-0131		A-70568-0165		A-70568-0199		A-70568-0233	62
64	15-47-7564	A-70568-0030	15-47-7664	A-70568-0064	15-47-7764	A-70568-0098		A-70568-0132		A-70568-0166		A-70568-0200		A-70568-0234	64
66	15-47-7566	A-70568-0031	15-47-7666	A-70568-0065	15-47-7766	A-70568-0099		A-70568-0133		A-70568-0167		A-70568-0201		A-70568-0235	66
68	15-47-7568	A-70568-0032	15-47-7668	A-70568-0066	15-47-7768	A-70568-0100		A-70568-0134		A-70568-0168		A-70568-0202		A-70568-0236	68
70	15-47-7570	A-70568-0033	15-47-7670	A-70568-0067	15-47-7770	A-70568-0101		A-70568-0135		A-70568-0169		A-70568-0203		A-70568-0237	70
72	15-47-7572	A-70568-0034	15-47-7672	A-70568-0068	15-47-7772	A-70568-0102		A-70568-0136		A-70568-0170		A-70568-0204		A-70568-0238	72

MODIFY PLATE
EC NO: UCP2006-2806
DRWN:MSI BARRA 2006/05/31
CHKD:DMORGAN 2006/06/06
APPR:SMILLER 2006/06/07
DESCRIPTION
REV G

QUALITY SYMBOLS
▼=0
▽=0

GENERAL TOLERANCES (UNLESS SPECIFIED)

	mm	INCH
4 PLACES	± ---	± ---
3 PLACES	± ---	± .005
2 PLACES	± 0.13	± .01
1 PLACE	± 0.25	± ---
ANGULAR ±1/2°		

DRAFT WHERE APPLICABLE MUST REMAIN WITHIN DIMENSIONS

DIMENSION STYLE: MM/IN
SCALE: ---
DESIGN UNITS: INCH
THIRD ANGLE PROJECTION

DRAWN BY: SMR DATE: 1993/11/10
CHECKED BY: SMR DATE: 1993/11/10
APPROVED BY: DATE

TITLE: SALES ASSY-DUAL ROW SHROUDED WAFER/HIGH TEMP .025SQ/RND PIN .100 GRID

molex MOLEX INCORPORATED

MATERIAL NO.: SEE TABLE
DOCUMENT NO.: SDA-70568-****
SHEET NO.: 2 OF 2
SIZE: C

THIS DRAWING CONTAINS INFORMATION THAT IS PROPRIETARY TO MOLEX INCORPORATED AND SHOULD NOT BE USED WITHOUT WRITTEN PERMISSION