THIS DRAWING IS UNPUBLISHED. RELEASED FOR PUBLICATION -.- .
© COPYRIGHT - BY TYCO ELECTRONICS CORPORATION. ALL RIGHTS RESERVED.

LOC	DIST
DF	SO

REVISIONS

P	LTR	DESCRIPTION	DATE	DWN	APVD
	AD	REV PER ECO-05-014991	31JAN06	PY	DE

AMP P/N	A	B	C	D	E	F	REMARKS	
846985-1	24.00	.38	6.00	6.00	1.25	2.00	6	OBSOLETE
846985-2	15.00	.38	8.00	8.00	1.25	2.00	6	
846985-3	8.00	.38	8.00	8.00	1.25	2.00	6	OBSOLETE
846985-4	16.00	.38	8.00	8.00	1.50	1.50	6	OBSOLETE
846985-5	11.00	.38	12.00	-	1.50	1.50	6	OBSOLETE
846985-6	11.00	.38	12.00	12.00	1.50	1.50	6	OBSOLETE
846985-7	12.00	.38	6.00	6.00	1.25	2.00	6	
846985-8	9.00	.38	8.00	8.00	1.50	2.00	6	
846985-9	12.00	.38	6.00	-	1.50	2.00	6	
1-846985-0	12.00	.38	12.00	12.00	1.50	1.00	6	
1-846985-1	39.37	.38	3.94	3.94	1.97	1.97	6	OBSOLETE
1-846985-2	12.00	.38	12.00	12.00	1.50	2.25	6	
1-846985-3	8.00	.38	8.00	8.00	1.25	1.50	6	OBSOLETE
1-846985-4	8.00	.38	10.00	-	1.25	1.40	6	OBSOLETE
1-846985-5	192.00	.38	12.00	-	2.00	2.00	6	OBSOLETE
1-846985-6	120.00	.38	8.00	8.00	1.25	2.00	6	OBSOLETE
1-846985-7	72.00	.38	-	6.00	1.50	2.00	6	
1-846985-8	36.00	.38	12.00	-	1.50	2.00	6	
1-846985-9	22.00	.38	10.00	10.00	1.50	1.00	6	
2-846985-0	11.80	.38	12.00	12.00	1.50	1.00	6	OBSOLETE
2-846985-1	6.75	.38	3.00	-	1.06	.44	6	OBSOLETE
2-846985-2	18.00	.38	6.00	-	1.50	1.50	6	
2-846985-3	24.00	.38	6.00	-	1.50	1.50	6	
2-846985-4	30.00	.38	-	6.00	1.50	1.50	6	OBSOLETE
2-846985-5	20.22	.38	-	4.00	8.00	4.00	6	OBSOLETE
2-846985-6	21.00	.38	10.00	10.00	1.50	1.00	6	OBSOLETE
2-846985-7	60.00	.38	8.00	8.00	1.25	2.00	6	
2-846985-8	49.00	.38	-	12.00	1.50	2.00	6	
2-846985-9	180.00	.38	8.00	8.00	1.25	2.00	6	OBSOLETE
3-846985-0	6.50	.38	8.00	8.00	1.50	2.00	6	OBSOLETE
3-846985-1	9.50	.38	8.00	8.00	1.50	2.00	6	OBSOLETE
3-846985-2	66.00	.38	12.00	12.00	1.50	2.00	6	OBSOLETE
3-846985-3	108.00	.38	12.00	12.00	1.50	2.00	6	OBSOLETE
3-846985-4	12.00	.38	-	6.00	1.50	2.00	6	
3-846985-5	7.50	.38	-	6.00	1.50	2.00	6	
3-846985-6	13.50	.38	-	8.00	1.25	2.00	6	
3-846985-7	7.50	.38	-	8.00	1.25	2.00	6	
3-846985-8	96.00	.38	-	12.00	1.50	2.00	6	
3-846985-9	12.00	.38	6.00	6.00	1.50	2.00	5 6	
5-846985-9	12.00	.38	6.00	-	1.50	2.00	7	
7-846985-8	49.00	.38	-	12.00	1.50	2.00	7	

1. TOLERANCE: UP TO 24" = ±.12
   24" & UP = ±1%
2. COLOR OF LEAD WIRE WHITE.
3. TO MATE WITH AMP LGH-1/2 RECEPTACLE WITH .53 BARREL DEPTH.
4. MARK PER MIL-STD-130.
5. BOTH GND LEADS INCLUDE RING TONGUE TERMINAL.
6. PIGTAIL IS SOLDER DIPPED.
7. INSULATION CUT, BUT NOT REMOVED.

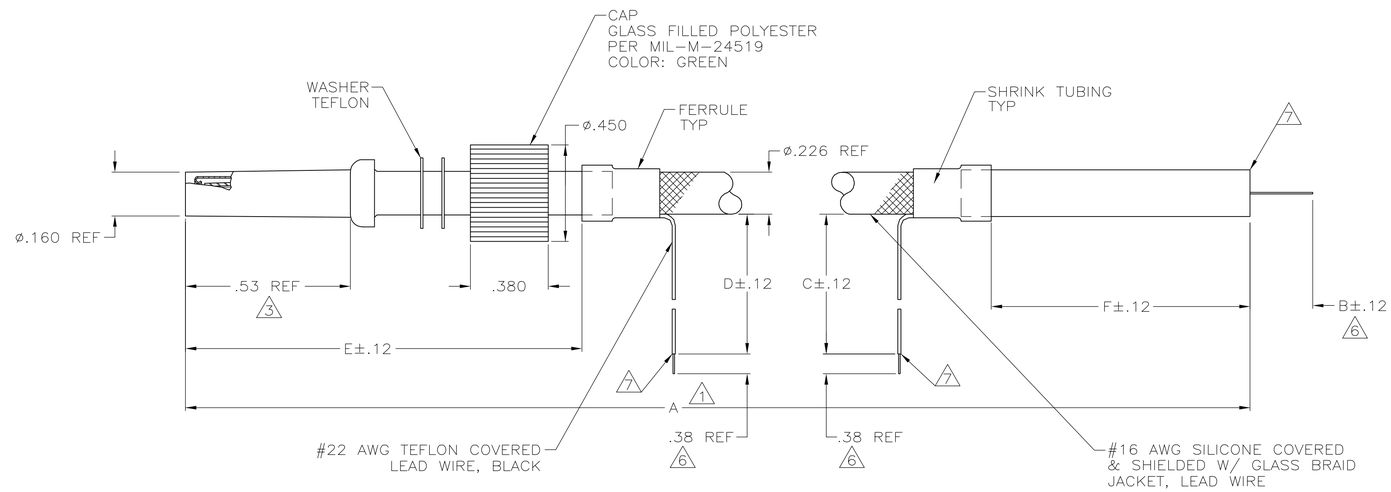

THIS DRAWING IS A CONTROLLED DOCUMENT.

DIMENSIONS: INCHES

TOLERANCES UNLESS OTHERWISE SPECIFIED:
0 PLC ± -
1 PLC ± -
2 PLC ± .03
3 PLC ± .010
4 PLC ± -
ANGLES ± -

MATERIAL -
FINISH -

DWN T.THOMPSON 25-AUG-93
CHK D.EABY 24-SEP-93
APVD D.EABY 24-SEP-93
PRODUCT SPEC -
APPLICATION SPEC -
WEIGHT -

Tyco Electronics Corporation
Harrisburg, Pa 17105-3608

NAME LEAD ASSY, SHIELDED W/GLASS BRAID JACKET LGH-1/2 -

SIZE A1 | CAGE CODE 00779 | DRAWING NO C-846985 | RESTRICTED TO -

CUSTOMER DRAWING | SCALE 4:1 | SHEET 1 OF 1 | REV AD