THIS DRAWING IS UNPUBLISHED. RELEASED FOR PUBLICATION -.- .
© COPYRIGHT - BY TYCO ELECTRONICS CORPORATION. ALL RIGHTS RESERVED.

LOC	DIST
GP	00

REVISIONS

P	LTR	DESCRIPTION	DATE	DWN	APVD
	H	REVISED PER ECO-07-000091	06FEB07	BM	SB

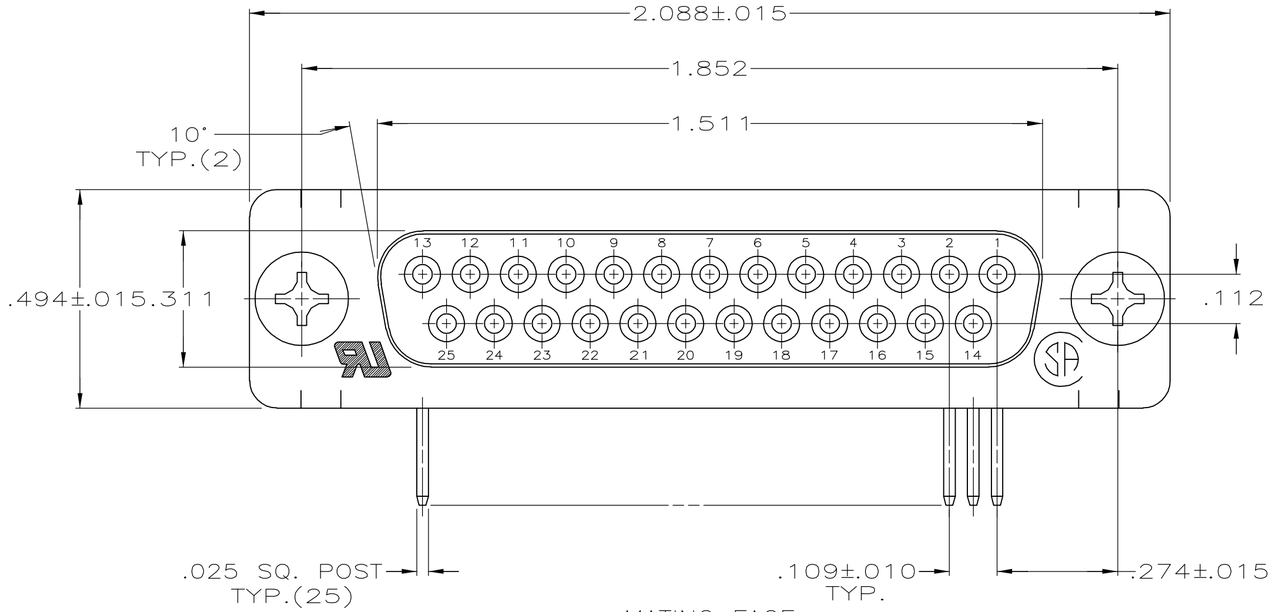

1. CONNECTOR MATES WITH ANY 25 POS. PLUG IN AMPLIMITE SERIES & COMPLIES WITH AMP SPEC. 108-40,005 WHERE APPLICABLE.
2. FLAME RETARDANT 94V-0 RATED THERMOPLASTIC; COLOR: BLACK.
3. STEEL PER ASTM A109.
4. PHOS. BRONZE PER QQ-B-750.
5. TIN PLATING PER MIL-T-10727, GOLD PLATING PER MIL-G-45204, NICKEL PLATING PER QQ-N-290.
6. TIN PLATED.
7. GOLD FLASH FOR A LENGTH OF .100 MINIMUM FROM MATING END, .000100 MINIMUM TIN-LEAD ON OPPOSITE END, BOTH OVER .000050 MINIMUM NICKEL.
8. .000030 MINIMUM GOLD FOR A LENGTH OF .100 MINIMUM FROM MATING END, .000100 MINIMUM TIN-LEAD ON OPPOSITE END, BOTH OVER .000050 MINIMUM NICKEL.

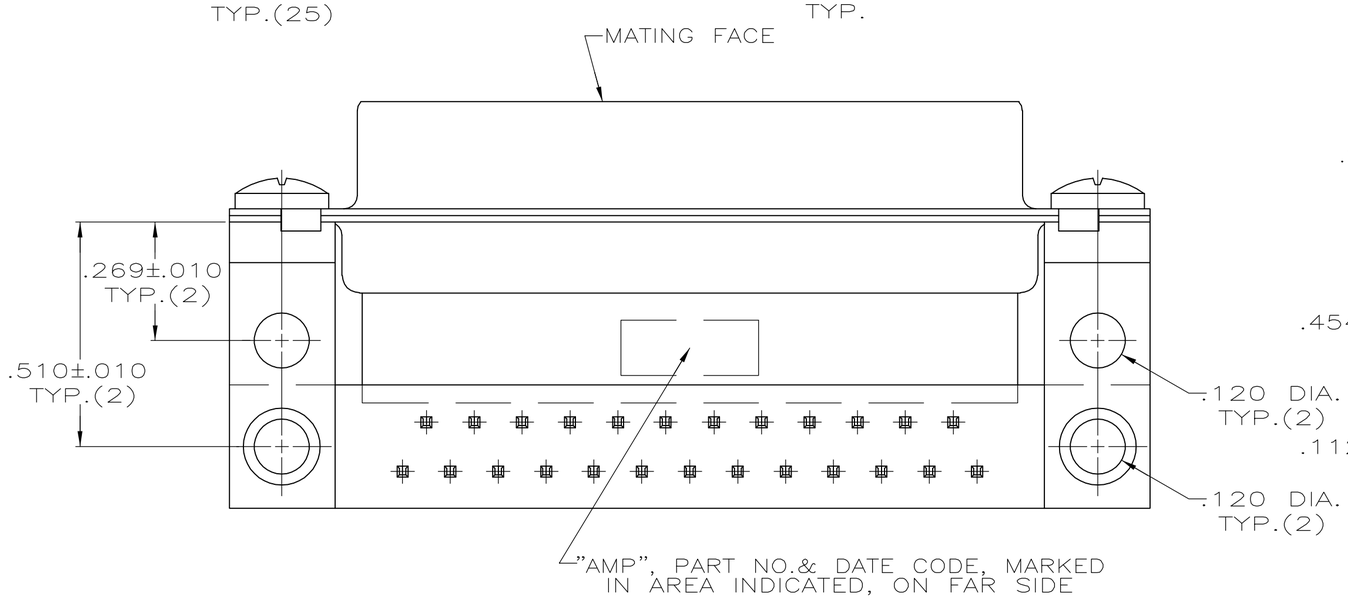

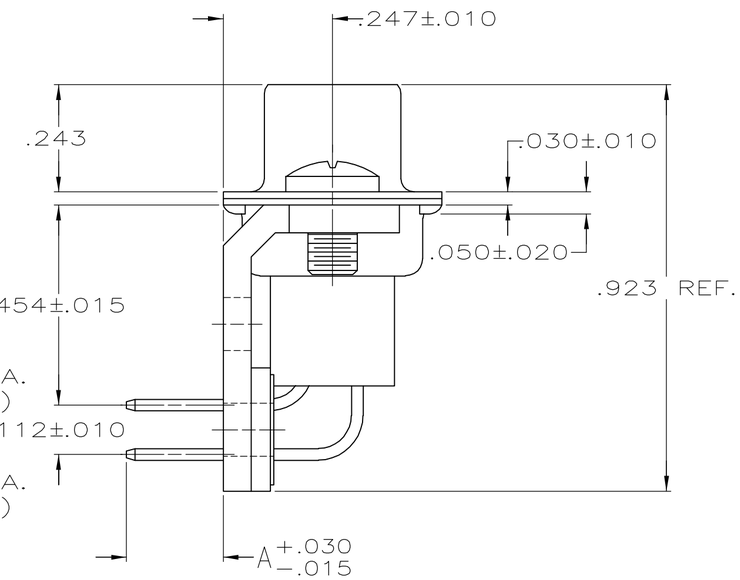

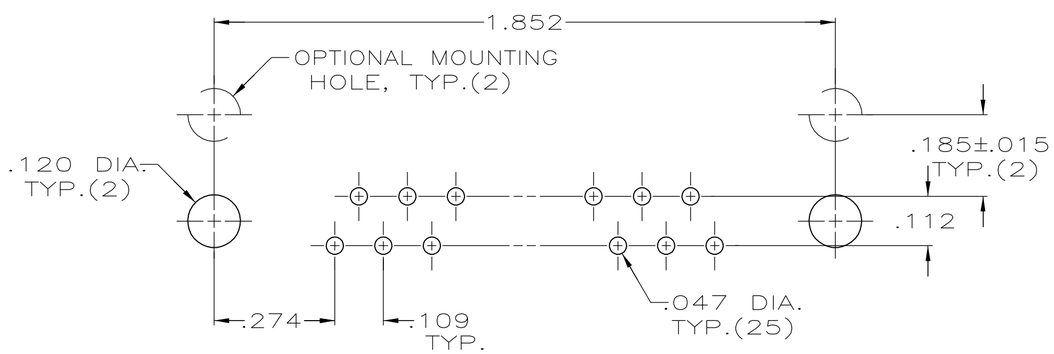

P.C. BOARD MOUNTING DIMENSIONS

OBSOLETE	.125	8	745440-4
OBSOLETE	.125	7	745440-3
OBSOLETE	.220	8	745440-2
	.220	7	745440-1
	A	CONTACT FINISH	PART NUMBER

THIS DRAWING IS A CONTROLLED DOCUMENT.

DIMENSIONS: INCHES

TOLERANCES UNLESS OTHERWISE SPECIFIED:
0 PLC ± -
1 PLC ± -
2 PLC ± -
3 PLC ± -
4 PLC ± -
ANGLES ± -

MATERIAL -
FINISH -

DWN J. GERACE
CHK J. GERACE
APVD J. GERACE
PRODUCT SPEC —
APPLICATION SPEC —
WEIGHT —

tyco Electronics
Tyco Electronics Corporation
Harrisburg, PA 17105-3608

NAME
RECEPTACLE ASSEMBLY, SIZE 3, 25 POS., RIGHT ANGLE, .454 SERIES, .025 SQ, POSTS, AMPLIMITE HDP

SIZE	CAGE CODE	DRAWING NO	RESTRICTED TO
A2	00779	C-745440	—

CUSTOMER DRAWING | SCALE — | SHEET 1 OF 1 | REV H

745440