FOR FRONT MOUNTED MATING CONNECTORS

PANEL THICKNESS 1-2mm FOR SAFE CONTACT AREA

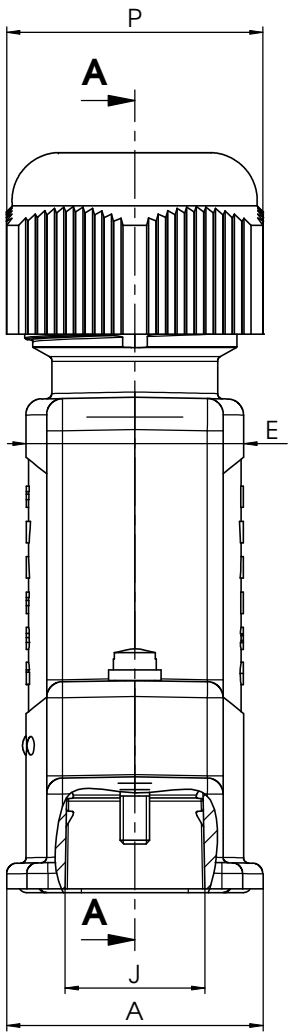

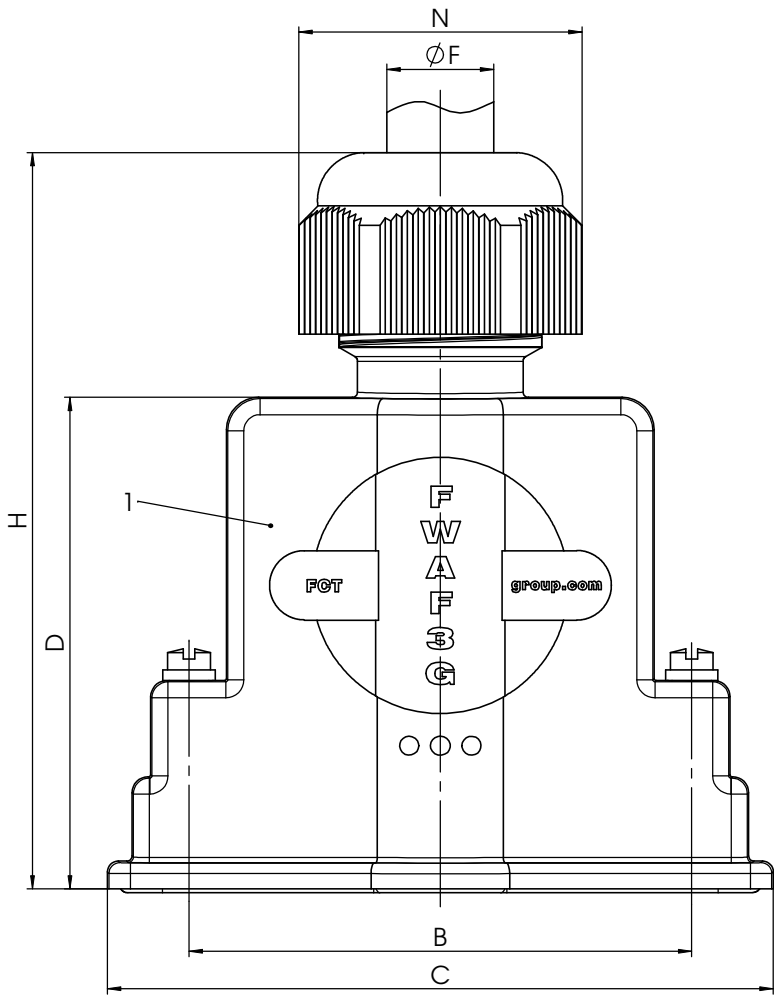

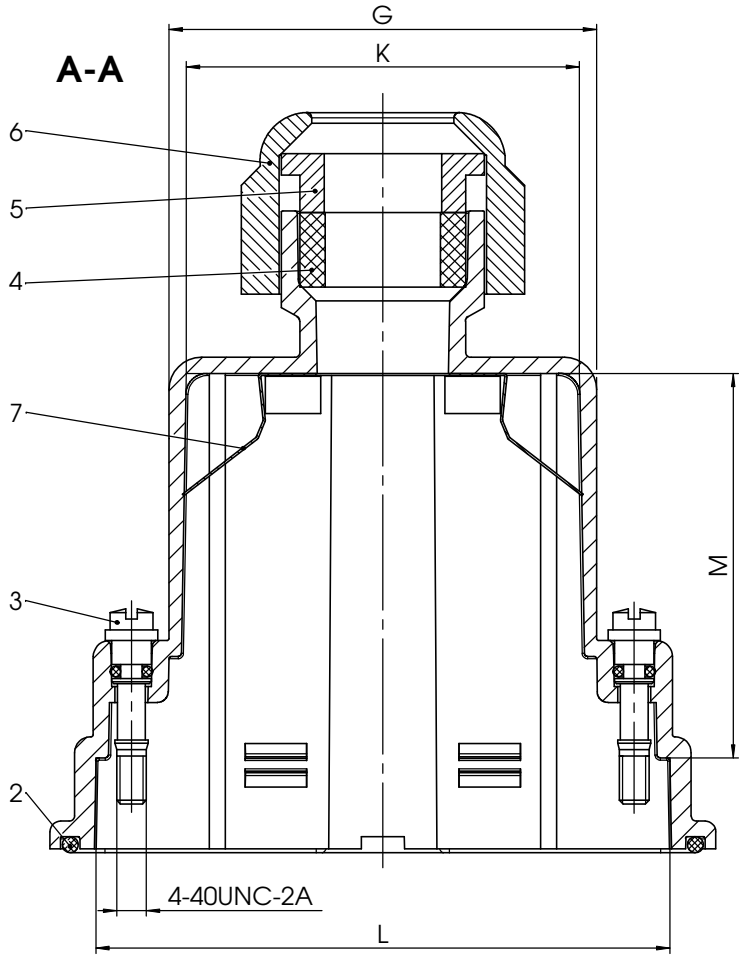

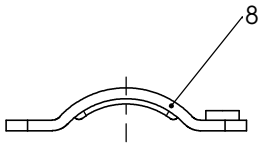

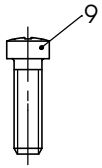

øF = Cable diameter

max. torque are 40 Ncm
Mounting instruction AM0305
Part-No. 8 and 9 not mounted

② Protection standard IP67, 100% checked according to DIN EN 60529

No.	St.	Part	Type Description/Material	Surface plating/Colour/Class
9	2	Cable clamp screw	Steel	zinc plated
8	2	Cable clamp	Steel	zinc plated
7	1	Shielding plate	Bronze	tin plated
6	1	Nut	Polyester	black
5	1	Pressure washer	Polyester	black
4	1	Seal ring	Elastomer	black
3	2	Locking screw with o-ring seal	FVSW1/5-K1449 4-40 / Brass+Elastomer	nickel plated + red
2	1	O-ring seal	Elastomer	red
1	1	Hood	FWAF1G, FWAF2-5G-K201 / Polyester	black

Order No.	Shell Size / for No.of Contacts	A ±0.3	B ±0.1	C ±0.3	D ±0.3	E ±0.3	øF min - max	G ±0.3	H min - max	J ±0.3	K ±0.3	L ±0.3	M ±0.5	N ±0.5	P	
FWAF1G	1 / 9	20.2	25	39.8	38.8	16.5	6 - 8	20	56.5 - 59.5	13	17	32.4	28.8	22.1	SW20	①
FWAF2G	2 / 15	20.2	33.3	48.5	38.8	16.5	6 - 8	28	56.5 - 60	13	25	41.1	28.8	26.6	SW24	①
FWAF3G	3 / 25	24	47	62.3	46	20.3	8 - 10.5	40	64.5 - 68	13	37	53.8	36	26.6	SW24	
FWAF4G	4 / 37	24	63.5	78.6	54.5	20.3	8 - 10.5	56.2	74 - 78.5	13	53.2	71.1	44.5	26.6	SW24	
FWAF5G	5 / 50	27.6	61.1	75.7	54.5	22	9 - 11	55.5	76 - 81	16	52.2	68	44.5	32.1	SW29	① ②

REV.	DATE	CH.-NO.
2	26-09-2008	22309
1	17-04-2008	22244

Measurement without tolerance occ. to ISO 2768-m

SCALE 2:1

NAME / DATE
DRAWN Meyer-RichterMUC 17-04-2008
CHECKED KBurkhardt 29-09-2008

FCT group
fctgroup.com

ORIGINAL: DIN A3-DRAWING AS A FILE

TITLE
Plastic hood waterproof

DWG.NO. FWAF1-5G

REV. 2

REPLACEMENT FOR: FWAF1G-2G_SW

PAGES 1

COMMENT:
ALL RIGHTS ARE RESERVED BY US FOR THIS DRAWING, WITHOUT OUR PRIOR CONSENT.
IT MAY NEITHER BE DUBLICATED NOR MADE AVAILABLE TO A THIRD PARTY,
AND IT ALSO MAY NOT BE IMPROPERLY USED BY TE RECEIVER, OR A THIRD PARTY.