REV.	DATE	DESCRIPTION
NC	04/26/96	INITIAL RELEASE
A	07/29/06	UPDATE DRAWING FORMAT

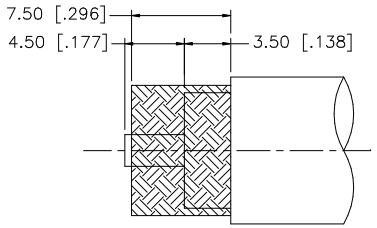

RECOMMENDED CABLE STRIPPING DIMS

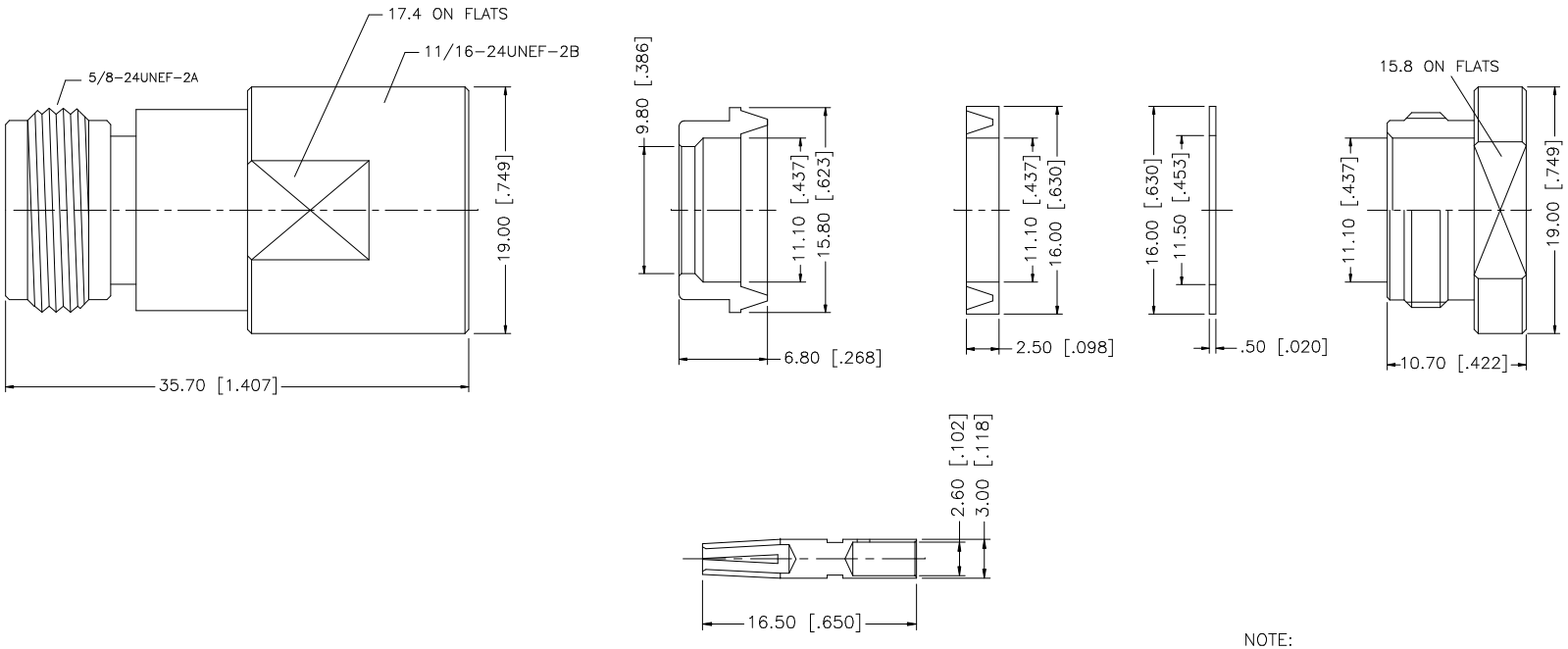

NOTE:

1. CRIMPED CONTACT PIN HEX CRIMP SIZE .100" OR SOLDER.

	DESCRIPTION	MATERIAL	FINISH	QTY
8				
7	CONTACT PIN	PHOS. BRONZE	GOLD	1
6	NUT	BRASS	NEXCOTE	1
5	WASHER	BRASS	NEXCOTE	1
4	GASKET	SILICONE	RED	1
3	BRAID CLAMP	BRASS	NEXCOTE	1
2	INSULATOR	TEFLON	NATURAL	1
1	BODY	BRASS	NEXCOTE	1

UNLESS OTHERWISE SPECIFIED DIMENSIONS ARE IN MILLIMETERS. DIMENSIONS IN [ ] ARE IN INCHES AND FOR CUSTOMER REFERANCE ONLY.

UNLESS OTHERWISE SPECIFIED TOLERANCES FOR MILLIMETERS ARE:
0.5 – 8mm ± 0.20mm
8 – 30mm ± 0.40mm
30 – 120mm ± 0.50mm

UNLESS OTHERWISE SPECIFIED TOLERANCES FOR INCHES ARE:
.020 – .315 = ± 0.007"
.315 – 1.180 = ± 0.015"
1.180 – 4.724 = ± 0.020"

DO NOT SCALE DRAWING

APPROVALS		DATE
DRAWN	G.R.S.	07/29/06
CHECKED		
ISSUED		
SHEET	1 OF 1	
CAD FILE	C:/172/172116.DWG	

Amphenol Connex

PART DESCRIPTION
N CLAMP JACK
(FOR RG-213/U, 214/U, 8/U CABLE)

PART NO. 172116

DWG. NO.	REV.	SIZE	SCALE
172116.DWG	A	A	NA