THIS DRAWING IS A CONTROLLED DOCUMENT FOR AMP INCORPORATED.
IT IS SUBJECT TO CHANGE AND THE CONTROLLING ENGINEERING
ORGANIZATION SHOULD BE CONTACTED FOR THE LATEST REVISION.

LOC	DIST
GP	00

REVISIONS

P	LTR	DESCRIPTION	DATE	DWN	APVD
	G1	REVISE PER ECO-06-020811	17/OCT/06	ZR	CR

1. ZINC PLATED PER ASTM B633, TYPE II, CLASS SCI, YELLOW CHROMATE.
2. ZINC PLATED PER ASTM B633, TYPE III, CLASS SCI, CLEAR CHROMATE.
3. PARTS PACKAGED UNASSEMBLED.
4. PARTS PACKAGED AS A UNIT KIT.
5. PART INDIVIDUALLY BULK PACKED & SHIPPED AS A UNIT PACKAGE.
6. STAINLESS STEEL PER ASTM A666.

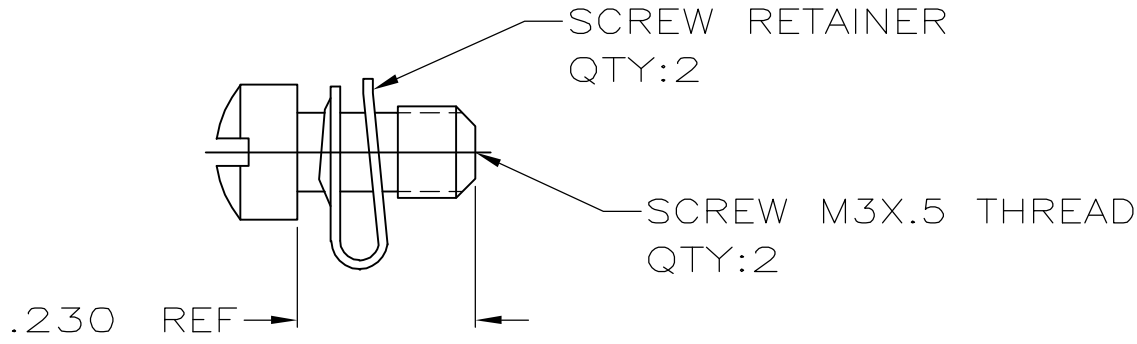

PACKAGING	SCREW FINISH	PART NUMBER
OBSOLETE	5	2	207871-4
OBSOLETE	4	2	207871-3
OBSOLETE	5	1	207871-2
OBSOLETE	4	1	207871-1

THIS DRAWING IS UNPUBLISHED. © COPYRIGHT 19 BY AMP INCORPORATED. ALL RIGHTS RESERVED.
RELEASED FOR PUBLICATION ,19 .

DIMENSIONS: mm

TOLERANCES UNLESS OTHERWISE SPECIFIED:

0 PLC ±-
1 PLC ±-
2 PLC ±-
3 PLC ±-
4 PLC ±-
ANGLES ±-

DWN J. GALLUCCI 4-23-90
CHK W.G. LENKER 8-15-90
APVD J. ASSINI 7-10-90
PRODUCT SPEC –
APPLICATION SPEC –
WEIGHT –

MATERIAL SCREWS: STEEL RETAINERS: 6
FINISH SCREWS: SEE TABLE

AMP Incorporated
Harrisburg, PA 17105-3608

NAME SCREW RETAINER ASSEMBLY, METRIC, AMPLIMITE™

SIZE	CAGE CODE	DRAWING NO
A4	00779	C-207871

CUSTOMER DRAWING

SCALE 4:1 SHEET 1 OF 1 REV G1

Translated 060621.202856 (YYMMDD.HHMMSS) from Computervision, Inc., Medusa Revision 12.2.5T