THIS DRAWING IS UNPUBLISHED. RELEASED FOR PUBLICATION -,- .
© COPYRIGHT - By - ALL RIGHTS RESERVED.

LOC	DIST
1	—

REVISIONS

P	LTR	DESCRIPTION	DATE	DWN	APVD
	AA	CHANGED PACK. ET00-0010-05	21JAN2005	H.Y.	—
	AA1	REV PER ECO-09-021510	03SEP09	KK	AEG
	AA2	ECR-10-022530	07JAN11	KK	HMR

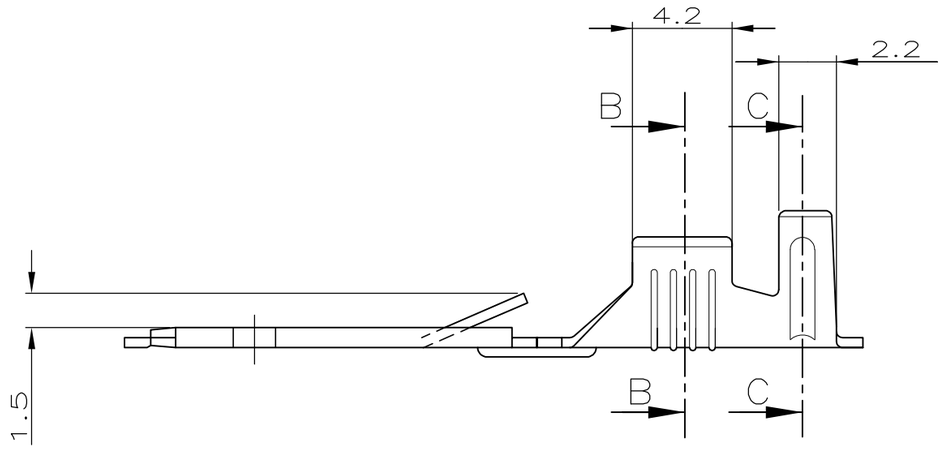

1) STATO DI FORNITURA (SCALA 1:1)
(SUPPLY CONDITION, Scale 1:1)

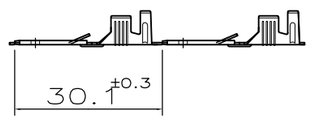

SENSO DI USCITA DEL TERMINALE DALLA BOBINA
(DIRECTION OFF TOP OF REEL)

2) SPECIFICA DI PRODOTTO : 108-20020
(PRODUCT SPECIFICATION : 108-20020)

3 BOBINATO SU BOBINA 10"1/2 CON CARTA INTERPOSTA
(REELED ON 10"1/2 CARTON TYPE REEL WITH INTERLEAVE PAPER STRIP)

4 BOBINATO SU BOBINA 12" CON CARTA INTERPOSTA
(REELED ON 12" CARTON TYPE REEL WITH INTERLEAVE PAPER STRIP)

5 BOBINATO SU BOBINA 10"1/2
(REELED ON 10"1/2 CARTON TYPE REEL)

6 OBSOLETE PARTS: OBSOLETE CIS STREAMLINING PER D.RENAUD/D.SINISI

7 OBSOLETE

SEZIONE A-A
(SECTION A-A)

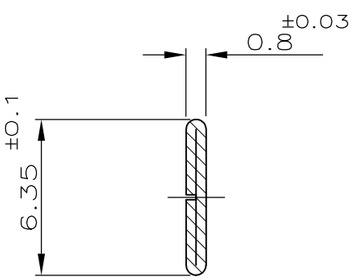

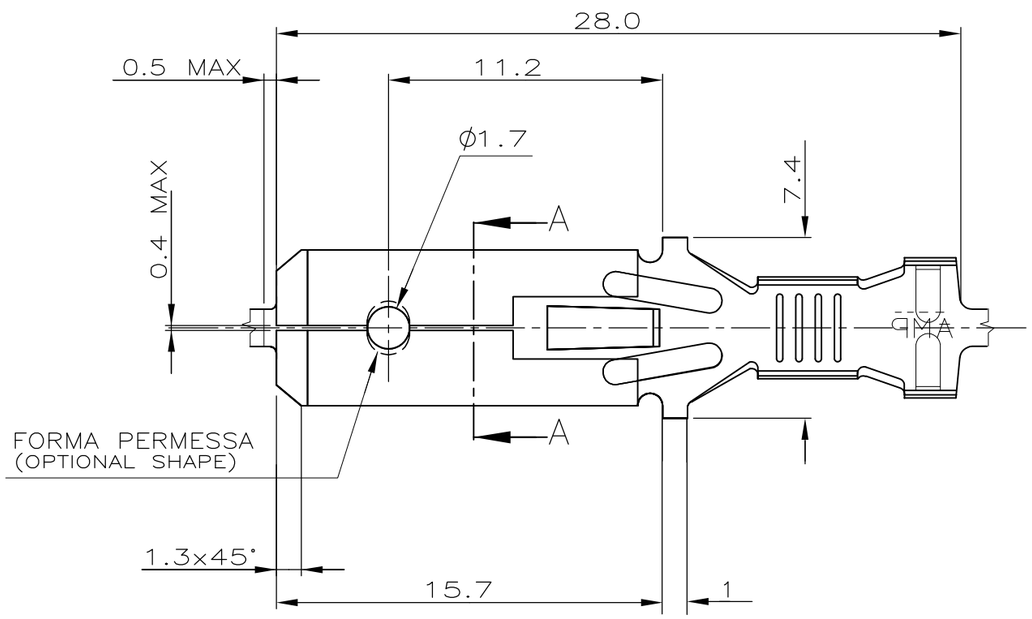

	NOTE (NOTES)	FINITURA (FINISH)	MATERIALE (MATERIAL)	NUMERO (TE P/N)	REV
7	4	PRE-STAGNATO (PRE-TIN PLATED)	OTTONE (BRASS)	~~1-280081-2~~	AA
	3	NUDO (UNPLATED)	OTTONE (BRASS)	1-280081-1	Z
7	4	ARGENTATO (SILVER PLATED)	OTTONE (BRASS)	~~1-280081-0~~	Z
	3	STAGNATO (TINPLATED)	OTTONE (BRASS)	280081-9	Z
	4	NUDO (UNPLATED)	OTTONE (BRASS)	280081-8	Z
	3	STAGNATO (TINPLATED)	BRONZO FOSF.(PH.BRONZE)	280081-7	Z
6	OBSOLETE 3	STAGNATO (TINPLATED)	OTTONE (BRASS)	~~280081-6~~	Z
6	OBSOLETE 5	STAGNATO (TINPLATED)	BRONZO FOSF.(PH.BRONZE)	~~280081-4~~	Z
	4	NUDO (UNPLATED)	BRONZO FOSF.(PH.BRONZE)	280081-3	Z
	4	STAGNATO (TINPLATED)	OTTONE (BRASS)	280081-2	Z
	5	NUDO (UNPLATED)	OTTONE (BRASS)	280081-1	Z

SEZIONE C-C
(SECTION C-C)

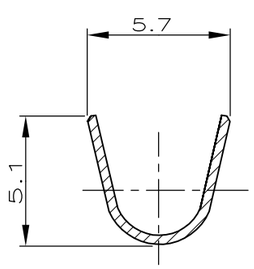

SEZIONE B-B
(SECTION B-B)

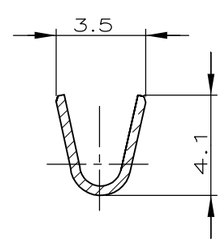

DIAM. ISOLANTE (INS. DIA. RANGE)	RANGO FILO (WIRE RANGE)
Ø4 mm.MAX	0.8-2.5mm²

THIS DRAWING IS A CONTROLLED DOCUMENT.

DIMENSIONS: mm

TOLERANCES UNLESS OTHERWISE SPECIFIED: ±0.3
0 PLC ± -
1 PLC ± -
2 PLC ± -
3 PLC ± -
4 PLC ± -
ANGLES ± 2°

MATERIAL -
FINISH -

DWN R.FABRIS 01-FEB-00
CHK -
APVD -
PRODUCT SPEC -
APPLICATION SPEC -
WEIGHT -

TE Connectivity

NAME
FASTIN-FASTON Conn.,.250"sr.
TAB CONTACT

SIZE	CAGE CODE	DRAWING NO	RESTRICTED TO
A3	00779	C-280081	—

CUSTOMER DRAWING | SCALE 4:1 | SHEET 1 OF 1 | REV AA2