THIS DRAWING IS UNPUBLISHED. RELEASED FOR PUBLICATION -,- .
© COPYRIGHT - By - ALL RIGHTS RESERVED.

REVISIONS

P	LTR	DESCRIPTION	DATE	DWN	APVD
	L3	REVISED PER ECO-12-007718	08MAY12	KH	DR
	L4	REVISED PER ECO-17-007400	24NOV2017	RS	DR

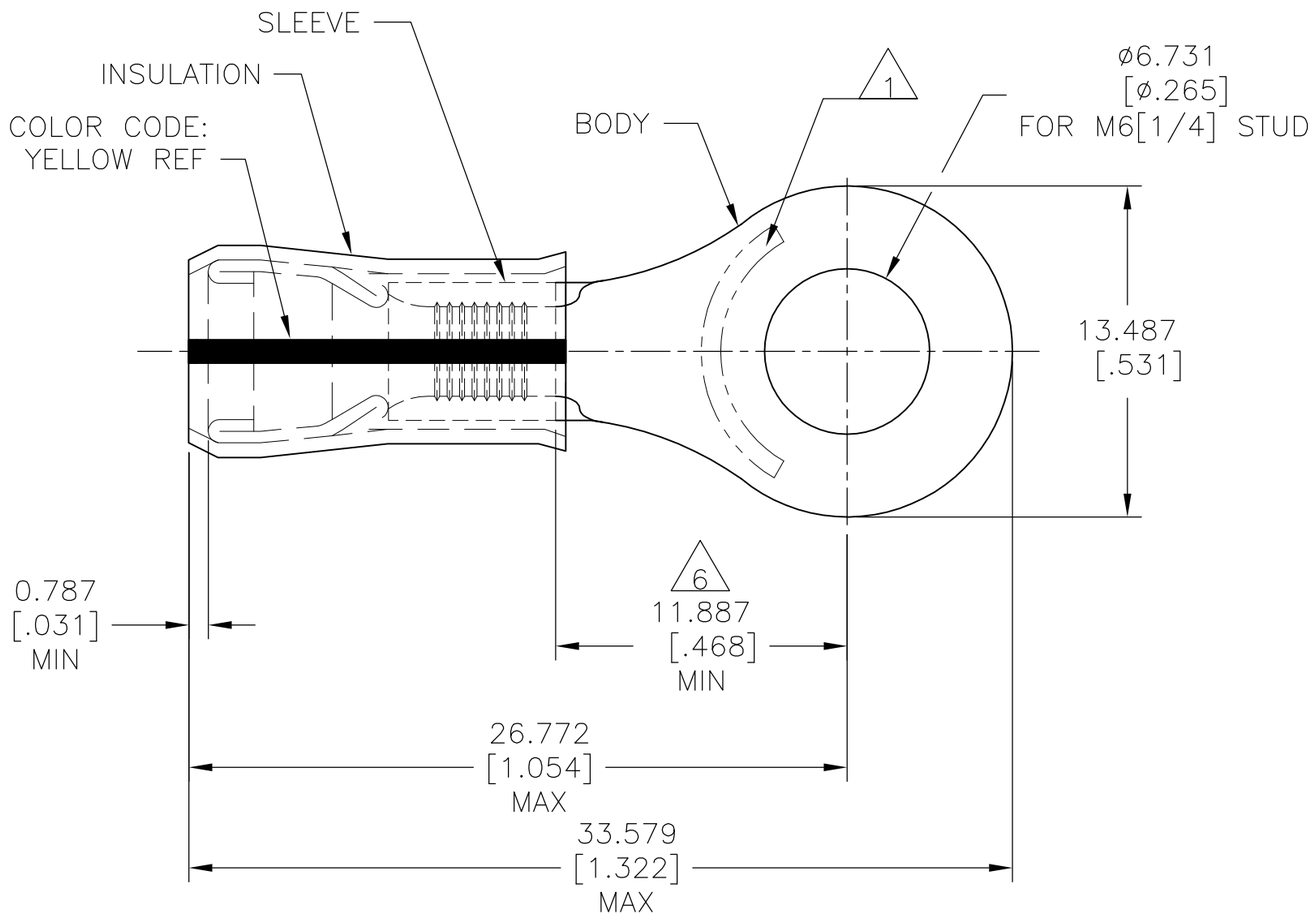

AMP
WIRE RANGE

12-10 AWG
STRANDED

1. STAMP AMP 12-10* APPROX AS SHOWN.
2. WIRE INSULATION : ø3.810-5.842[ø.150-.230]
3. BODY MATERIAL THK: 0.991±0.051[.039±.002]
4. FINISH:
   BODY & SLEEVE: TIN-LEAD (93-7) PLATE PER ASTM B545, (3% MIN LEAD CONTENT)
   INSULATION: COLOR-NATURAL.
5. MATERIAL:
   BODY & SLEEVE: CU PER ASTM B152
   INSULATION: PVF2,
6. APPLIES FROM EDGE OF METAL WIRE BARREL TO CENTER OF STUD HOLE.
7. MEETS M7928/4-157, CLASS 1 & 2
   MEETS M7928/13-157. CLASS 1 & 2

QTY	PACKAGE TYPE	PART NO
500	LOOSE PIECE	7 53426-1

AMP INCORPORATED
CUSTOMER SERVICE SYSTEMS

FOR ADDITIONAL PRODUCT INFORMATION OR COPIES OF DRAWINGS AND TECHNICAL DOCUMENTS	PRODUCT INFORMATION CENTER 1-800-522-6752
FOR APPLICATION TOOLING INFORMATION	TOOLING ASSISTANCE CENTER 1-800-722-1111
FOR ORDER ENTRY	1-800-526-5142

THIS DRAWING IS A CONTROLLED DOCUMENT FOR AMP INCORPORATED. IT IS SUBJECT TO CHANGE AND THE CONTROLLING ENGINEERING ORGANIZATION SHOULD BE CONTACTED FOR THE LATEST REVISION.

MAX RECOMMENDED OPERATING TEMPERATURE: 150°C [302°F] MAX

VOLTAGE RATING: -

CIRCULAR MIL AREA: 2.62-6.64mm² [5,180-13,100] STRANDED

THIS DRAWING IS A CONTROLLED DOCUMENT.

DIMENSIONS: mm [INCHES]

TOLERANCES UNLESS OTHERWISE SPECIFIED:

0 PLC	± -
1 PLC	± -
2 PLC	± -
3 PLC	± 0.127[.005]
4 PLC	± -
ANGLES	± -

MATERIAL 5

FINISH 4

DWN	JR RUTH	16OCT07
CHK	T MICHIELUTTI	16OCT07
APVD	T MICHIELUTTI	16OCT07
PRODUCT SPEC	—	
APPLICATION SPEC	114-2157	
WEIGHT	—	

TE Connectivity

NAME: TERMINAL, RING TONGUE, PVF2 , P.I.D.G. WIRE SIZE: 12-10 AWG

SIZE	CAGE CODE	DRAWING NO	RESTRICTED TO
A3	00779	C-53426	—

CUSTOMER DRAWING | SCALE 4:1 | SHEET 1 OF 1 | REV L4