UL® / cUL®

- Robust aluminium enclosure for mechanical engineering and automation technology
- Fixing options for DIN rails and mounting plates
- Usable in wide temperature area

## Technical Data

***Material:***

DIN EN 1706 EN AC-AlSi 12 (Fe)

***Painting:***

powder coating

***Colour:***

RAL 7001, silver grey

special colour on request

***Ingress protection:***

IP 66 to EN 60529

higher protection on request

***Impact resistance:***

7 Joule to EN 60079-0

***Temperature range:***

| | |
|---|---|
| PU (polyurethane) seal (std.): | -40°C to +90°C |
| CR (chloroprene) seal: | -40°C to +100°C |
| VMQ(silicone) seal (optional): | -60°C to +130°C |

### *Included in delivery*

Aluminium enclosure consisting of lid, seal incl. captive +/- stainless steel screws, base with 2 or 4 earthing screws

# Aluminium Standard

## *Programme range*

| Order No. | W x L x H (mm) | DIN rails for terminals TS 15 | DIN rails for terminals TS 35 | Earthing rail, number of clamps | Mounting plate, thickness in mm [1] | External brackets set [2] | External aluminium hinge pair [3], [4] | Internal hinge pair [2], [4] | Quick lock [5] | Turn bolt fastener [4] |
|---|---|---|---|---|---|---|---|---|---|---|
| ***Standard enclosures*** | | | | | | | | | | |
| ***01.05 05 03*** | 45 x 50 x 30 | | | | | | | | | |
| ***01.06 06 03*** | 64 x 58 x 34 | | | | | | | | | |
| ***01.06 10 03*** | 64 x 98 x 34 | | | | | | | | | |
| ***01.06 15 03*** | 64 x 150 x 34 | | | | | | | | | |
| ***01.06 19 03*** | 64 x 185 x 34 | • | | | | | | | | |
| ***01.08 08 06*** | 80 x 75 x 57 | • | | | 1,5 | | | | | |
| ***01.08 13 06*** | 80 x 125 x 57 | • | | | 1,5 | | | | | |
| ***01.08 18 06*** | 80 x 175 x 57 | • | | | 1,5 | | | | | |
| ***01.08 25 05*** | 80 x 250 x 52 | • | | | | | | | | |
| ***01.10 10 08*** | 100 x 100 x 81 | • | | | 1,5 | • | • | | • | |
| ***01.10 16 08*** | 100 x 160 x 81 | • | | | 1,5 | • | • | | • | |
| ***01.10 20 08*** | 100 x 200 x 81 | • | | | 1,5 | • | • | | • | |
| ***01.12 12 08*** | 120 x 122 x 81 | | • | 6 | 1,5 | • | • | | • | |
| ***01.12 12 09*** | 120 x 122 x 91 | | • | 6 | 1,5 | • | • | | • | |
| ***01.12 22 08*** | 120 x 220 x 81 | | • | 13 | 1,5 | • | • | | • | |
| ***01.12 22 09*** | 120 x 220 x 91 | | • | 13 | 1,5 | • | • | | • | |
| ***01.12 22 12*** | 120 x 220 x 118 | | • | 13 | 1,5 | • | • | | • | |
| ***01.12 36 08*** | 120 x 360 x 81 | | • | 23 | 1,5 | • | • | | • | |
| ***01.14 14 09*** | 140 x 140 x 91 | | • | 6 | 1,5 | • | • | | • | |
| ***01.14 20 09*** | 140 x 200 x 91 | | • | 11 | 1,5 | • | • | • | • | • |
| ***01.16 16 09*** | 160 x 160 x 91 | | • | 8 | 1,5 | • | • | • | • | • |
| ***01.16 26 09*** | 160 x 260 x 91 | | • | 16 | 1,5 | • | • | • | • | • |
| ***01.16 36 09*** | 160 x 360 x 91 | | • | 23 | 1,5 | • | • | • | • | • |
| ***01.16 56 09*** | 160 x 560 x 91 | | • | 36 | 2,0 | • | • | • | • | • |
| ***01.18 18 10*** | 180 x 180 x 101 | | • | 8 | 1,5 | • | • | • | • | • |
| ***01.18 28 10*** | 180 x 280 x 101 | | • | 17 | 1,5 | • | • | • | • | • |
| ***01.23 10 11*** | 230 x 100 x 111 | | • | - | 1,5 | • | • | • | • | • |
| ***01.23 20 11*** | 232 x 202 x 111 | | • | 10 | 1,5 | • | • | • | • | • |
| ***01.23 20 18*** | 232 x 202 x 181 | | • | 10 | 1,5 | • | • | • | • | • |
| ***01.23 28 11*** | 230 x 280 x 111 | | • | 16 | 1,5 | • | • | • | • | • |
| ***01.23 33 11*** | 230 x 330 x 111 | | • | 21 | 1,5 | • | • | • | • | • |
| ***01.23 33 18*** | 230 x 330 x 181 | | • | 21 | 1,5 | • | • | • | • | • |
| ***01.23 40 11*** | 230 x 400 x 111 | | • | 25 | 2 | • | • | • | • | • |
| ***01.23 40 23*** | 230 x 400 x 225 | | • | 25 | 2 | • | • | • | • | • |
| ***01.23 60 11*** | 230 x 600 x 111 | | • | 40 | 2 | • | • | • | • | • |
| ***01.31 40 11*** | 313 x 404 x 111 | | • | 25 | 2 | • | • | • | • | • |
| ***01.31 40 14*** | 312 x 403 x 141 | | • | 25 | 2 | • | • | • | • | • |
| ***01.31 40 18*** | 313 x 404 x 181 | | • | 25 | 2 | • | • | • | • | • |
| ***01.31 40 23*** | 313 x 404 x 227 | | • | 25 | 2 | • | • | • | • | • |
| ***01.31 60 11*** | 310 x 600 x 111 | | • | 40 | 2 | • | • | • | • | • |
| ***01.31 60 18*** | 310 x 600 x 181 | | • | 40 | 2 | • | • | • | • | • |
| ***01.60 60 20*** | 600 x 600 x 202 | | • | | 2,5 | | | | | |
| ***Field enclosure with integrated external fastening*** | | | | | | | | | | |
| ***01.06 12 00*** | 64 x 115 x 34 | | | | | | | | | |
| ***01.06 19 00*** | 64 x 185 x 34 | | | | | | | | | |

[1]) galvanized sheet steel [2]) stainless steel [3]) diecast alu [4]) Please quote installation side A-D when ordering [5]) on request

***Other accessories***

EMC screening (without type 01.60 60 20)
SWB/SBG/SBGL corrosion protection (RAL 5009)
Allen lid screws (without type 01.60 60 20)
Silicone lid seal up to +130°C
Sealable lid screws in steel (without type 01.60 60 20)

## *Terminal mounting*

| | *Phoenix* | | | | | | | | | | | | | | | Earth conductor connection | | | | | | | | | | | | | |
|---|---|---|---|---|---|---|---|---|---|---|---|---|---|---|---|---|---|---|---|---|---|---|---|---|---|---|---|---|---|
| DIN rail TS 15 | X | X | X | | | | | | | | | | | | | | | | | | | | | | | | | | |
| DIN rail TS 35 | | | | X | X | X | X | X | X | X | X | X | X | X | X | | | | | | | | | | | | | | |
| Voltage (V) | 250 | 400 | 500 | 500 | 800 | 800 | 800 | 800 | 800 | 800 | 1000 | 1000 | 1000 | 1000 | 1000 | | | | | | | | | | | | | | |
| Current (A) | 24 | 32 | 41 | 17 | 24 | 32 | 41 | 57 | 76 | 101 | 150 | 150 | 232 | 309 | 415 | | | | | | | | | | | | | | |
| Nom. cross section (mm²) | 2.5 | 3 | 5 | 1.5 | 2.5 | 2.5 | 4 | 6 | 10 | 16 | 35 | 50 | 95 | 150 | 240 | | | | | | | | | | | | | | |
| Terminal width (mm) | 5.2 | 5.2 | 6.2 | 4.2 | 5.2 | 5.2 | 6.2 | 8.2 | 10.2 | 12.2 | 15.2 | 20 | 25 | 31 | 36 | | | | | | | | | | | | | | |
| Terminal type / Type | MBK 2,5 E | MBK 3 / E-Z | MBK 5 / E-Z | UK 1,5 N | UK 2,5 N | UK 3 N | UK 5 N | UK 6 N | UK 10 N | UK 16 N | UK 35 | UKH 50 | UKH 95 | UKH 150 | UKH 240 | MSLKG 5 insulated, green/yellow | USLKG 1,5 N insulated green/yellow | USLKG 2,5 N insulated green/yellow | USLKG 6 N insulated green/yellow | USLKG 10 N insulated green/yellow | USKLG 16 N insulated green/yellow | USLKG 3 insulated green/yellow | USLKG 5 insulated green/yellow | USLKG 50 insulated green/yellow | USLKG 95 insulated green/yellow | | Earthing bar 2.5 mm² with cable lug max. 10 mm² | Earthing screw M4 with cable lug max. 6 mm² | M6 with cable lug max. 35 mm² | |
| ***01.05 05 03*** | | | | | | | | | | | | | | | | | | | | | | | | | | | | | |
| ***01.06 06 03*** | 4 | | | | | | | | | | | | | | | | | | | | | | | | | | 1 | | |
| ***01.06 10 03*** | 11 | | | | | | | | | | | | | | | | | | | | | | | | | | 2 | | |
| ***01.06 15 03*** | 16 | | | | | | | | | | | | | | | | | | | | | | | | | | 2 | | |
| ***01.06 19 03*** | 28 | | | | | | | | | | | | | | | | | | | | | | | | | | 2 | | |
| ***01.08 08 06*** | 9 | 9 | 7 | | | | | | | | | | | | | | | | | | | | | | | | 2 | | |
| ***01.08 13 06*** | 18 | 18 | 15 | | | | | | | | | | | | | | | | | | | | | | | | 2 | | |
| ***01.08 18 06*** | 28 | 28 | 23 | | | | | | | | | | | | | | | | | | | | | | | | 2 | | |
| ***01.08 25 05*** | 43 | 43 | 36 | | | | | | | | | | | | | | | | | | | | | | | | 2 | | |
| ***01.10 10 08*** | 14 | 14 | 11 | 17 | | | | | | | | | | | | | | | | | | | | | | | 2 | | |
| ***01.10 16 08*** | 25 | 25 | 21 | 31 | | | | | | | | | | | | | | | | | | | | | | | 2 | | |
| ***01.10 20 08*** | 33 | 33 | 27 | 41 | | | | | | | | | | | | | | | | | | | | | | | 2 | | |
| ***01.12 12 08*** | | | | 20 | 16 | 16 | 13 | 10 | | | | | | | | | | | | | | | | | | 5 | | | |
| ***01.12 12 09*** | | | | 20 | 16 | 16 | 13 | 10 | | | | | | | | | | | | | | | | | | 5 | | 4 | |
| ***01.12 22 08*** | | | | 43 | 35 | 35 | 29 | 22 | 17 | 15 | | | | | | | | | | | | | | | | 13 | | 4 | |
| ***01.12 22 09*** | | | | 43 | 35 | 35 | 29 | 22 | 17 | 15 | | | | | | | | | | | | | | | | 13 | | 4 | |
| ***01.12 22 12*** | | | | 44 | 35 | 35 | 30 | 22 | 18 | 15 | | | | | | | | | | | | | | | | 13 | | 4 | |
| ***01.12 36 08*** | | | | 76 | 61 | 61 | 51 | 39 | 31 | 26 | | | | | | | | | | | | | | | | 23 | | 4 | |
| ***01.14 14 09*** | | | | 24 | 20 | 20 | 16 | 12 | 10 | | | | | | | | | | | | | | | | | 6 | | 4 | |
| ***01.14 20 09*** | | | | 39 | 31 | 31 | 26 | 20 | 16 | 13 | | | | | | | | | | | | | | | | 11 | | 4 | |
| ***01.16 16 09*** | | | | 29 | 23 | 23 | 19 | 14 | 11 | 10 | | | | | | | | | | | | | | | | 8 | | 4 | |
| ***01.16 26 09*** | | | | 53 | 42 | 42 | 35 | 27 | 21 | 18 | 14 | | | | | | | | | | | | | | | 16 | | 4 | |
| ***01.16 36 09*** | | | | 76 | 61 | 61 | 51 | 39 | 31 | 26 | 21 | | | | | | | | | | | | | | | 23 | | 4 | |
| ***01.16 56 09*** | | | | 124 | 100 | 100 | 84 | 63 | 51 | 42 | 34 | | | | | | | | | | | | | | | 38 | | 4 | |
| ***01.18 18 10*** | | | | 34 | 27 | 27 | 23 | 17 | 14 | 11 | | | | | | | | | | | | | | | | 8 | | 4 | |
| ***01.18 28 10*** | | | | 57 | 46 | 46 | 39 | 29 | 23 | 19 | 15 | | | | | | | | | | | | | | | 17 | | 4 | |
| ***01.23 10 11*** | | | | 45 | 36 | 36 | 30 | 23 | 18 | | | | | | | | | | | | | | | | | 13 | | 4 | |
| ***01.23 20 11*** | | | | 39* | 31* | 31* | 26* | 20* | 16* | 13* | 10* | 8 | | | | | | | | as required | | | | | | 12 | | 4 | |
| ***01.23 20 18*** | | | | 39* | 31* | 31* | 26* | 20* | 16* | 13* | 10* | 8 | | | | | | | | | | | | | | 12 | | 4 | |
| ***01.23 28 11*** | | | | 57* | 46* | 46* | 39* | 29* | 23* | 19* | 15* | 12 | | | | | | | | | | | | | | 16 | | 4 | |
| ***01.23 33 11*** | | | | 69* | 56* | 56* | 47* | 35* | 28* | 23* | 19* | 14 | | | | | | | | | | | | | | 21 | | 4 | |
| ***01.23 33 18*** | | | | 69* | 56* | 56* | 47* | 35* | 28* | 23* | 19* | 14 | | | | | | | | | | | | | | 21 | | 4 | |
| ***01.23 40 11*** | | | | 85* | 69* | 69* | 57* | 43* | 35* | 29* | 23* | 17 | | | | | | | | | | | | | | 25 | | 4 | |
| ***01.23 40 23*** | | | | 85* | 69* | 69* | 57* | 43* | 35* | 29* | 23* | 17 | | | | | | | | | | | | | | 25 | | 4 | |
| ***01.23 60 11*** | | | | 133* | 107* | 107* | 90* | 68* | 54* | 45* | 36* | 27 | | | | | | | | | | | | | | 41 | | 4 | |
| ***01.31 40 11*** | | | | 85** | 69** | 69** | 57** | 43** | 35** | 29** | 23** | 17* | | | | | | | | | | | | | | 26 | | 4 | |
| ***01.31 40 14*** | | | | 85** | 69** | 69** | 57** | 43** | 35** | 29** | 23** | 17* | 14 | | | | | | | | | | | | | 26 | | 4 | |
| ***01.31 40 18*** | | | | 85** | 69** | 69** | 57** | 43** | 35** | 29** | 23** | 17* | 14 | | | | | | | | | | | | | 26 | | 4 | |
| ***01.31 40 23*** | | | | 85** | 69** | 69** | 57** | 43** | 35** | 29** | 23** | 17* | 14 | | | | | | | | | | | | | 26 | | 4 | |
| ***01.31 60 11*** | | | | 133** | 107** | 107** | 90** | 68** | 54** | 45** | 36** | 27* | | | | | | | | | | | | | | 40 | | 4 | |
| ***01.31 60 18*** | | | | 133** | 107** | 107** | 90** | 68** | 54** | 45** | 36** | 27* | 22 | | | | | | | | | | | | | 40 | | 4 | |
| ***01.60 60 20*** | | | | 131** | 106** | 106** | 89** | 67** | 54** | 45** | 36** | 27** | 22** | 17 | 15 | | | | | | | | | | | 40 | | 4 | |
| ***Field enclosure with integrated external fastening*** | | | | | | | | | | | | | | | | | | | | | | | | | | | | | |
| ***01.06 12 00*** | | | | | | | | | | | | | | | | | | | | | | | | | | | | | |
| ***01.06 19 00*** | | | | | | | | | | | | | | | | | | | | | | | | | | | | | |

* 2 DIN rails possible = double number of terminals
** 3 DIN rails possible = triple number of terminals

## *Terminal mounting*

| | ***Weidmüller*** | | | | | | | | | | | | | | | | | | | | | Earth conductor connection | | | |
|---|---|---|---|---|---|---|---|---|---|---|---|---|---|---|---|---|---|---|---|---|---|---|---|---|---|
| DIN rail TS 15 | | | | | X | X | X | X | | | | | | | | | | | | | | | | | |
| DIN rail TS 35 | | | | | | | | | X | X | X | X | X | X | X | X | X | X | X | X | | | | | |
| Voltage (V) | 500 | 400 | 400 | 400 | 250 | 400 | 250 | 400 | 500 | 800 | 800 | 800 | 1000 | 1000 | 1000 | 1000 | 1000 | 1000 | 1000 | 1000 | | | | | |
| Current (A) | 24 | 32 | 32 | 32 | 17 | 15 | 24 | 32 | 24 | 24 | 32 | 41 | 57 | 76 | 125 | 192 | 232 | 269 | 309 | 415 | | | | | |
| Nom. cross section (mm²) | 2,5 | 4 | 4 | 4 | 1,5 | 1,5 | 2,5 | 4 | 2,5 | 2,5 | 4 | 6 | 10 | 16 | 35 | 70 | 95 | 120 | 150 | 240 | | | | | |
| Terminal width (mm) | 38 | 38 | 52 | 92 | 5,1 | 3,5 | 5,1 | 6,1 | 5,1 | 5,1 | 6,1 | 8 | 10 | 12 | 16 | 20,5 | 27 | 27 | 32 | 36 | | | | | |
| Terminal type<br>Type | MK 3/4 (4-pole) | BK 4 (4-pole) | BK 6 (6-pole) | BK 12 (12-pole) | AKZ 1,5 | WDU 1,5 / R 3,5 | AKZ 2,5 | AKZ 4 | WDU 2,5 N | WDU 2,5 | WDU 4 | WDU 6 | WDU 10 | WDU 16 | WDU 35 | WDU 70 N | WDU 70 / 95 | WDU 95 / 120 N | WDU 120 / 150 | WDU 240 | | WPE | Earthing bar 2.5 mm² with cable lug max. 10 mm² | Earthing screw M4 with cable lug max. 6 mm² | M6 with cable lug max. 35 mm² |
| ***01.05 05 03*** | 1 | | | | | | | | | | | | | | | | | | | | | | | | |
| ***01.06 06 03*** | | 1 | | | | | | | | | | | | | | | | | | | | | | 1 | |
| ***01.06 10 03*** | | | 1 | | | | | | | | | | | | | | | | | | | | | 2 | |
| ***01.06 15 03*** | | | | 1 | | | | | | | | | | | | | | | | | | | | 2 | |
| ***01.06 19 03*** | | | | 1 | | | | | | | | | | | | | | | | | | | | 2 | |
| ***01.08 08 06*** | | | | | 8 | 11 | 8 | 6 | 8 | | | | | | | | | | | | | | | 2 | |
| ***01.08 13 06*** | | | | | 18 | 26 | 18 | 15 | 18 | | | | | | | | | | | | | | | 2 | |
| ***01.08 18 06*** | | | | | 28 | 40 | 28 | 23 | 28 | | | | | | | | | | | | | | | 2 | |
| ***01.08 25 05*** | | | | | 43 | 61 | 43 | 36 | 43 | | | | | | | | | | | | | | | 2 | |
| ***01.10 10 08*** | | | | | 13 | 18 | 13 | 10 | 13 | | | | | | | | | | | | | | | 2 | |
| ***01.10 16 08*** | | | | | 25 | 36 | 25 | 21 | 25 | | | | | | | | | | | | | | | 2 | |
| ***01.10 20 08*** | | | | | 33 | 47 | 33 | 27 | 33 | | | | | | | | | | | | | | | 2 | |
| ***01.12 12 08*** | | | | | | | | | | 16 | 13 | 10 | | | | | | | | | | | 5 | | |
| ***01.12 12 09*** | | | | | | | | | | 16 | 13 | 10 | 8 | | | | | | | | | | 5 | | 4 |
| ***01.12 22 08*** | | | | | | | | | | 35 | 29 | 22 | 17 | | | | | | | | | | 13 | | 4 |
| ***01.12 22 09*** | | | | | | | | | | 35 | 29 | 22 | 17 | | | | | | | | | | 13 | | 4 |
| ***01.12 22 12*** | | | | | | | | | | 36 | 30 | 22 | 18 | | | | | | | | | | 13 | | 4 |
| ***01.12 36 08*** | | | | | | | | | | 63 | 52 | 39 | 31 | | | | | | | | | as required | 23 | | 4 |
| ***01.14 14 09*** | | | | | | | | | | 20 | 16 | 12 | 10 | | | | | | | | | | 6 | | 4 |
| ***01.14 20 09*** | | | | | | | | | | 32 | 26 | 20 | 16 | 13 | | | | | | | | | 11 | | 4 |
| ***01.16 16 09*** | | | | | | | | | | 23 | 19 | 14 | 11 | 9 | | | | | | | | | 8 | | 4 |
| ***01.16 26 09*** | | | | | | | | | | 43 | 36 | 27 | 21 | 18 | | | | | | | | | 16 | | 4 |
| ***01.16 36 09*** | | | | | | | | | | 63 | 52 | 39 | 31 | 26 | | | | | | | | | 23 | | 4 |
| ***01.16 56 09*** | | | | | | | | | | 103 | 86 | 64 | 51 | 43 | | | | | | | | | 38 | | 4 |
| ***01.18 18 10*** | | | | | | | | | | 28 | 23 | 17 | 14 | 11 | | | | | | | | | 8 | | 4 |
| ***01.18 28 10*** | | | | | | | | | | 47 | 39 | 29 | 23 | 19 | | | | | | | | | 17 | | 4 |
| ***01.23 10 11*** | | | | | | | | | | | 31 | 23 | 18 | 15 | | | | | | | | | 13 | | 4 |
| ***01.23 20 11*** | | | | | | | | | | 32* | 26* | 20* | 16* | 13* | 10 | 7 | | | | | | | 12 | | 4 |
| ***01.23 20 18*** | | | | | | | | | | 32* | 26* | 20* | 16* | 13* | 10 | 7 | | | | | | | 12 | | 4 |
| ***01.23 28 11*** | | | | | | | | | | 47* | 39* | 29* | 23* | 19* | 14 | 11 | | | | | | | 16 | | 4 |
| ***01.23 33 11*** | | | | | | | | | | 57* | 48* | 36* | 28* | 24* | 18 | 14 | | | | | | | 21 | | 4 |
| ***01.23 33 18*** | | | | | | | | | | 57* | 48* | 36* | 28* | 24* | 18 | 14 | | | | | | | 21 | | 4 |
| ***01.23 40 11*** | | | | | | | | | | 71* | 59* | 44* | 35* | 29* | 22* | 17 | | | | | | | 25 | | 4 |
| ***01.23 40 23*** | | | | | | | | | | 71* | 59* | 44* | 35* | 29* | 22* | 17 | 13 | 13 | | | | | 25 | | 4 |
| ***01.23 60 11*** | | | | | | | | | | 111* | 92* | 69* | 55* | 46* | 34* | 27 | | | | | | | 41 | | 4 |
| ***01.31 40 11*** | | | | | | | | | | 71** | 59** | 44** | 35** | 29** | 22* | 17 | | | | | | | 26 | | 4 |
| ***01.31 40 14*** | | | | | | | | | | 71** | 59** | 44** | 35** | 29** | 22* | 17 | | | | | | | 26 | | 4 |
| ***01.31 40 18*** | | | | | | | | | | 71** | 59** | 44** | 35** | 29** | 22* | 17 | 13 | 13 | | | | | 26 | | 4 |
| ***01.31 40 23*** | | | | | | | | | | 71** | 59** | 44** | 35** | 29** | 22* | 17 | 13 | 13 | | | | | 26 | | 4 |
| ***01.31 60 11*** | | | | | | | | | | 111** | 92** | 69** | 55** | 46** | 34* | 27 | | | | | | | 40 | | 4 |
| ***01.31 60 18*** | | | | | | | | | | 111** | 92** | 69** | 55** | 46** | 34* | 27 | 20 | 20 | | | | | 40 | | 4 |
| ***01.60 60 20*** | | | | | | | | | | 109** | 91** | 68** | 54** | 45** | 34** | 26** | 20** | 20** | 15 | 15 | | | 40 | | 4 |
| ***Field enclosure with integrated external fastening*** | | | | | | | | | | | | | | | | | | | | | | | | | |
| ***01.06 12 00*** | | | 1 | | | | | | | | | | | | | | | | | | | | | | |
| ***01.06 19 00*** | | | | 1 | | | | | | | | | | | | | | | | | | | | | |

* 2 DIN rails possible = double number of terminals
** 3 DIN rails possible = triple number of terminals

## *Accessories*

***External brackets***
set = 4 pcs

| Order No. | for enclosure |
|---|---|
| ***10.03 11 01*** | 01.08 08 06 - 01.10 20 08 |
| ***10.03 11 02*** | 01.12 12 08 - 01.31 60 18 |

Type 10.03 11 01

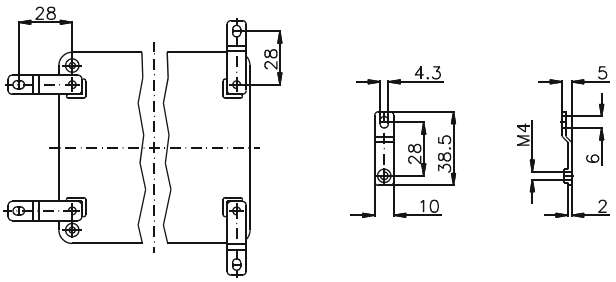


Type 10.03 11 02

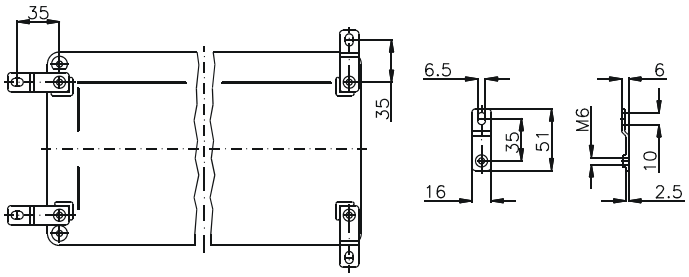

***External hinge***
opening angle 150°
set = 2 pcs

Order No. ***10.02 70 01***

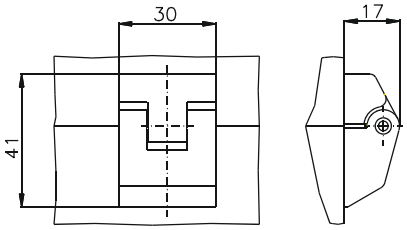

***Internal hinge***
opening angle 95°
set = 2 pcs

Order No. ***10.02 20 01***

Type: ***01.05 05 03*** External dimensions: ***45 x 50 x 30 mm*** Weight: ***91 g***

| DIN rail length in mm | max. fitting length in mm | Earthing rail clamp | Mounting plate (thickness in mm) | External mounting brackets | External hinge* set | EMC version | Internal hinge* set | SWB / SBG / SBGL Corr.protection | Allen lid screws | Silicone lid seal | Sealable lid screws in steel | Turn bolt fastener on request | Quick lock |
|---|---|---|---|---|---|---|---|---|---|---|---|---|---|
| | | | | | | | | | | | | | |
| | | | | | | • | | • | • | | • | | |

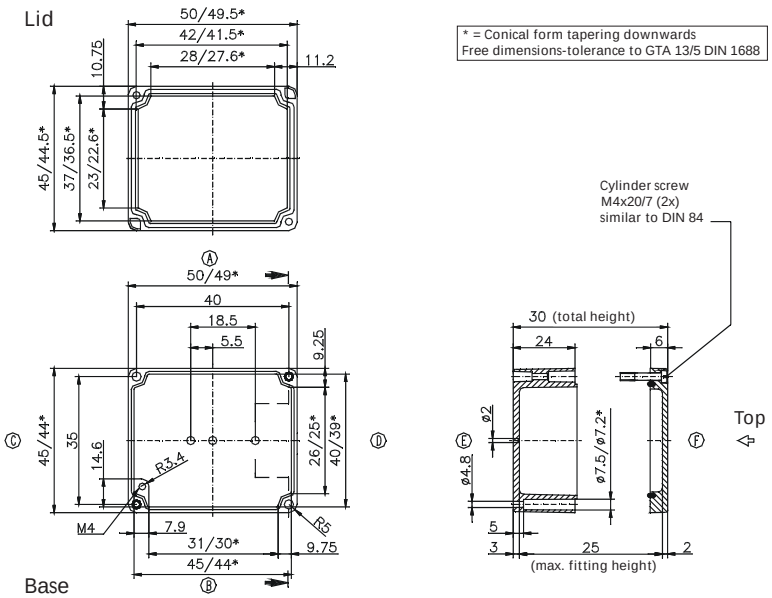


Maximum number of cable glands ***to DIN 50262****

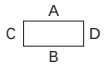


| ***M*** | Corner dim. | Side A/B | Side C/D | ***PG*** | Corner dim. | Side A/B | Side C/D |
|---|---|---|---|---|---|---|---|
| 12 | 17.25 | 2 | 1 | 7 | 17.25 | 2 | 1 |
| 16 | 25.30 | | | 9 | 21.85 | 1 | |
| 20 | 27.60 | | | 11 | 25.30 | | |
| 25 | 37.95 | | | 13.5 | 27.60 | | |
| 32 | 48.30 | | | 16 | 31.05 | | |
| 40 | 60.95 | | | 21 | 37.95 | | |
| 50 | 69.00 | | | 29 | 48.30 | | |
| 63 | 74.75 | | | 36 | 60.95 | | |
| | | | | 42 | 69.00 | | |
| | | | | 48 | 74.75 | | |
| | | | | | | | |

Type: ***01.06 06 03*** External dimensions: ***64 x 58 x 34 mm*** Weight: ***165 g***

| DIN rail length in mm | max. fitting length in mm | Earthing rail clamp | Mounting plate (thickness in mm) | External mounting brackets | External hinge* set | EMC version | Internal hinge* set | SWB / SBG / SBGL Corr.protection | Allen lid screws | Silicone lid seal | Sealable lid screws in steel | Turn bolt fastener on request | Quick lock |
|---|---|---|---|---|---|---|---|---|---|---|---|---|---|
| | | | | | | | | | | | | | |
| | | | | | | • | | • | • | • | • | | |

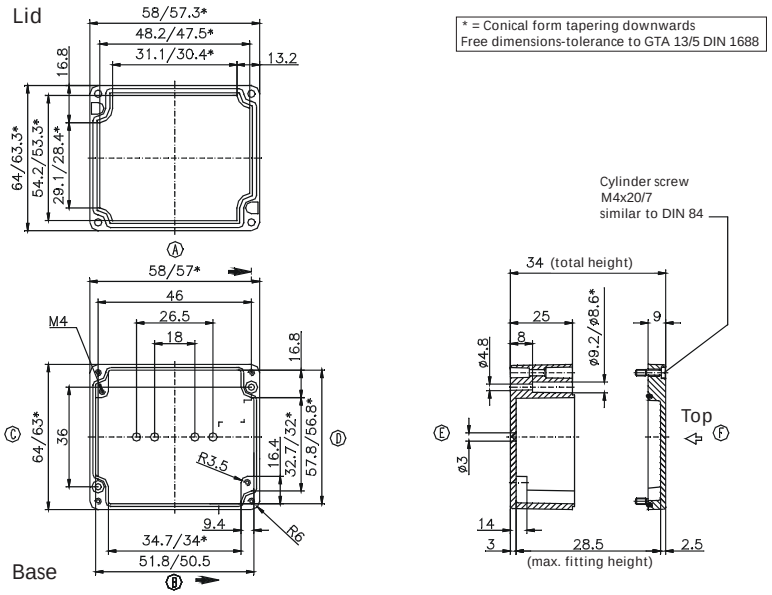


Maximum number of cable glands ***to DIN 50262****

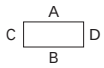


| ***M*** | Corner dim. | Side A/B | Side C/D | ***PG*** | Corner dim. | Side A/B | Side C/D |
|---|---|---|---|---|---|---|---|
| 12 | 17.25 | 2 | 1 | 7 | 17.25 | 2 | 1 |
| 16 | 25.30 | | | 9 | 21.85 | 1 | 1 |
| 20 | 27.60 | | | 11 | 25.30 | | |
| 25 | 37.95 | | | 13.5 | 27.60 | | |
| 32 | 48.30 | | | 16 | 31.05 | | |
| 40 | 60.95 | | | 21 | 37.95 | | |
| 50 | 69.00 | | | 29 | 48.30 | | |
| 63 | 74.75 | | | 36 | 60.95 | | |
| | | | | 42 | 69.00 | | |
| | | | | 48 | 74.75 | | |
| | | | | | | | |

* Please quote mounting side

Type: ***01.06 10 03*** External dimensions: ***64 x 98 x 34 mm*** Weight: ***224 g***

| DIN rail length in mm | max. fitting length in mm | Earthing rail clamp | Mounting plate (thickness in mm) | External mounting brackets | External hinge* set | EMC version | Internal hinge* set | SWB / SBG / SBGL Corr.protection | Allen lid screws | Silicone lid seal | Sealable lid screws in steel | Turn bolt fastener on request | Quick lock |
|---|---|---|---|---|---|---|---|---|---|---|---|---|---|
| TS 15 | | | | | | | | | | | | | |
| 87.5 | | | | | | • | | • | • | • | • | | |

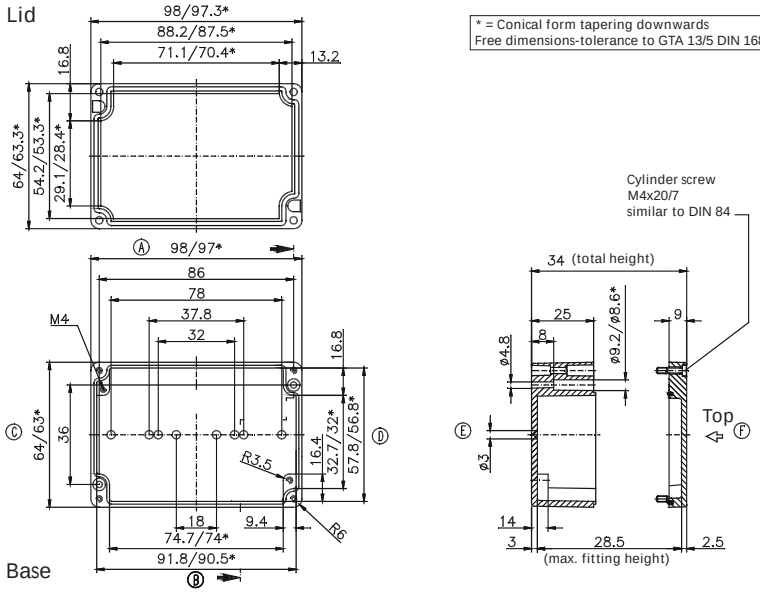


* = Conical form tapering downwards
Free dimensions-tolerance to GTA 13/5 DIN 1688

Maximum number of cable glands ***to DIN 50262****

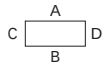


| ***M*** | Corner dim. | Side A/B | Side C/D | ***PG*** | Corner dim. | Side A/B | Side C/D |
|---|---|---|---|---|---|---|---|
| 12 | 17.25 | 4 | 1 | 7 | 17.25 | 4 | 1 |
| 16 | 25.30 | | | 9 | 21.85 | 3 | 1 |
| 20 | 27.60 | | | 11 | 25.30 | | |
| 25 | 37.95 | | | 13.5 | 27.60 | | |
| 32 | 48.30 | | | 16 | 31.05 | | |
| 40 | 60.95 | | | 21 | 37.95 | | |
| 50 | 69.00 | | | 29 | 48.30 | | |
| 63 | 74.75 | | | 36 | 60.95 | | |
| | | | | 42 | 69.00 | | |
| | | | | 48 | 74.75 | | |
| | | | | | | | |

Type: ***01.06 12 00*** External dimensions: ***64 x 115 x 34 mm*** Weight: ***290 g***

| DIN rail length in mm | max. fitting length in mm | Earthing rail clamp | Mounting plate (thickness in mm) | External mounting brackets | External hinge* set | EMC version | Internal hinge* set | SWB / SBG / SBGL Corr.protection | Allen lid screws | Silicone lid seal | Sealable lid screws in steel | Turn bolt fastener on request | Quick lock |
|---|---|---|---|---|---|---|---|---|---|---|---|---|---|
| | | | | | | | | | | | | | |
| | | | | | | • | | • | • | • | • | | |

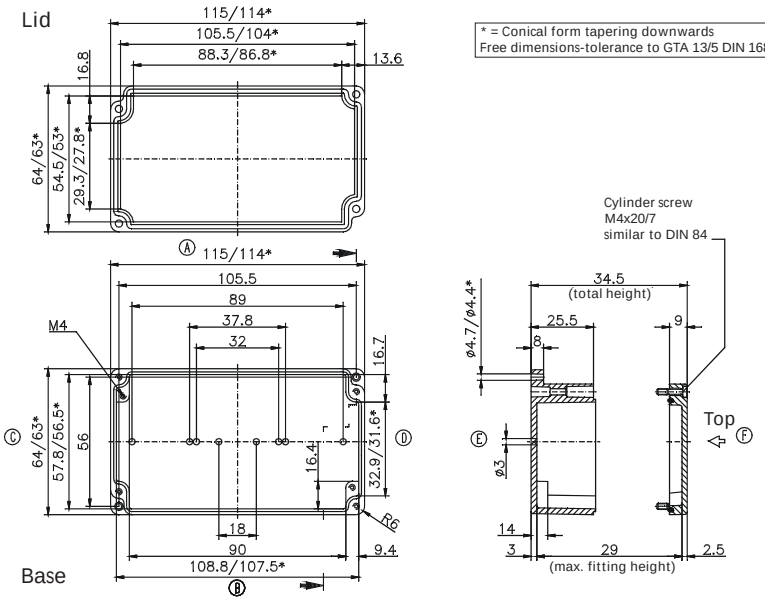


* = Conical form tapering downwards
Free dimensions-tolerance to GTA 13/5 DIN 1688

Maximum number of cable glands ***to DIN 50262****

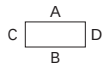


| ***M*** | Corner dim. | Side A/B | Side C/D | ***PG*** | Corner dim. | Side A/B | Side C/D |
|---|---|---|---|---|---|---|---|
| 12 | 17.25 | 5 | 1 | 7 | 17.25 | 5 | 1 |
| 16 | 25.30 | | | 9 | 21.85 | 4 | 1 |
| 20 | 27.60 | | | 11 | 25.30 | | |
| 25 | 37.95 | | | 13.5 | 27.60 | | |
| 32 | 48.30 | | | 16 | 31.05 | | |
| 40 | 60.95 | | | 21 | 37.95 | | |
| 50 | 69.00 | | | 29 | 48.30 | | |
| 63 | 74.75 | | | 36 | 60.95 | | |
| | | | | 42 | 69.00 | | |
| | | | | 48 | 74.75 | | |
| | | | | | | | |

* Please quote mounting side

Type: **01.06 15 03** External dimensions: ***64 x 150 x 34 mm*** Weight: ***316 g***

| DIN rail length in mm | max. fitting length in mm | Earthing rail clamp | Mounting plate (thickness in mm) | External mounting brackets | External hinge* set | EMC version | Internal hinge* set | SWB / SBG / SBGL Corr.protection | Allen lid screws | Silicone lid seal | Sealable lid screws in steel | Turn bolt fastener on request | Quick lock |
|---|---|---|---|---|---|---|---|---|---|---|---|---|---|
| TS 15 | | | | | | | | | | | | | |
| 139 | | | | | | • | | • | • | • | • | | |

Maximum number of cable glands ***to DIN 50262****

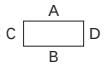


| ***M*** | Cor-ner dim. | Side A/B | Side C/D | ***PG*** | Cor-ner dim. | Side A/B | Side C/D |
|---|---|---|---|---|---|---|---|
| 12 | 17.25 | 8 | 1 | 7 | 17.25 | 8 | 1 |
| 16 | 25.30 | | | 9 | 21.85 | 6 | 1 |
| 20 | 27.60 | | | 11 | 25.30 | | |
| 25 | 37.95 | | | 13.5 | 27.60 | | |
| 32 | 48.30 | | | 16 | 31.05 | | |
| 40 | 60.95 | | | 21 | 37.95 | | |
| 50 | 69.00 | | | 29 | 48.30 | | |
| 63 | 74.75 | | | 36 | 60.95 | | |
| | | | | 42 | 69.00 | | |
| | | | | 48 | 74.75 | | |
| | | | | | | | |

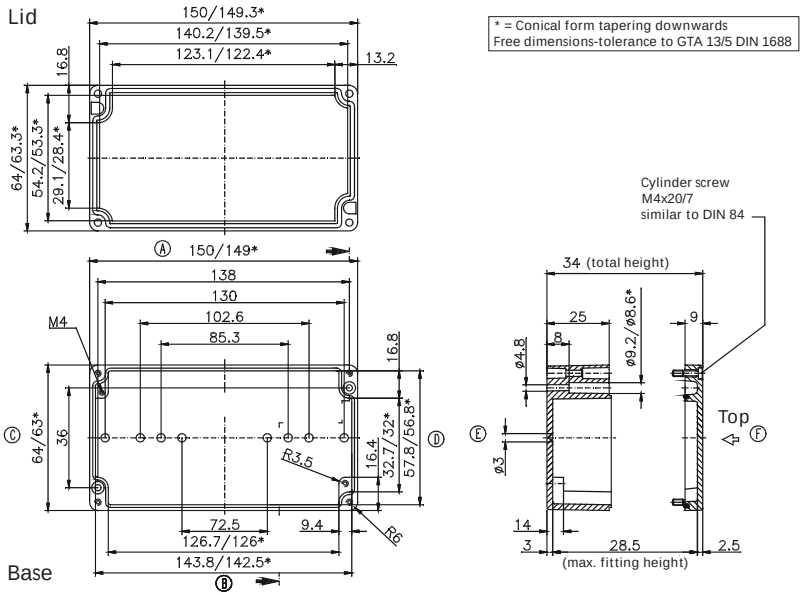


Type: **01.06 19 03** External dimensions: ***64 x 185 x 34 mm*** Weight: ***500 g***

| DIN rail length in mm | max. fitting length in mm | Earthing rail clamp | Mounting plate (thickness in mm) | External mounting brackets | External hinge* set | EMC version | Internal hinge* set | SWB / SBG / SBGL Corr.protection | Allen lid screws | Silicone lid seal | Sealable lid screws in steel | Turn bolt fastener on request | Quick lock |
|---|---|---|---|---|---|---|---|---|---|---|---|---|---|
| TS 15 | | | | | | | | | | | | | |
| 174 | | | | | | • | | • | • | • | • | | |

Maximum number of cable glands ***to DIN 50262****

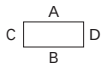


| ***M*** | Cor-ner dim. | Side A/B | Side C/D | ***PG*** | Cor-ner dim. | Side A/B | Side C/D |
|---|---|---|---|---|---|---|---|
| 12 | 17.25 | 10 | | 7 | 17.25 | 10 | |
| 16 | 25.30 | | | 9 | 21.85 | | |
| 20 | 27.60 | | | 11 | 25.30 | | |
| 25 | 37.95 | | | 13.5 | 27.60 | | |
| 32 | 48.30 | | | 16 | 31.05 | | |
| 40 | 60.95 | | | 21 | 37.95 | | |
| 50 | 69.00 | | | 29 | 48.30 | | |
| 63 | 74.75 | | | 36 | 60.95 | | |
| | | | | 42 | 69.00 | | |
| | | | | 48 | 74.75 | | |
| | | | | | | | |

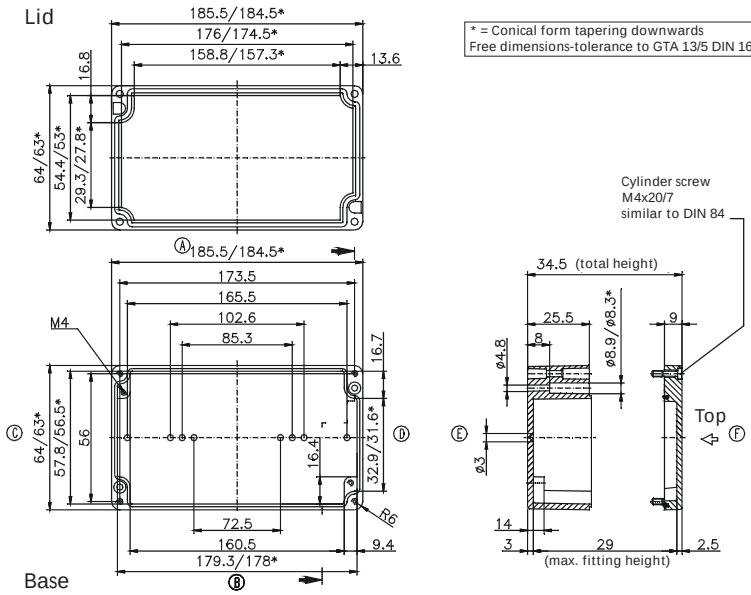


* Please quote mounting side

Type: ***01.06 19 00*** External dimensions: ***64 x 185 x 34 mm*** Weight: ***420 g***

| DIN rail length in mm | max. fitting length in mm | Earthing rail clamp | Mounting plate (thickness in mm) | External mounting brackets | External hinge* set | EMC version | Internal hinge* set | SWB / SBG / SBGL Corr.protection | Allen lid screws | Silicone lid seal | Sealable lid screws in steel | Turn bolt fastener on request | Quick lock |
|---|---|---|---|---|---|---|---|---|---|---|---|---|---|
| TS 15 | | | | | | | | | | | | | |
| 174 | | | | | | • | | • | • | • | • | | |

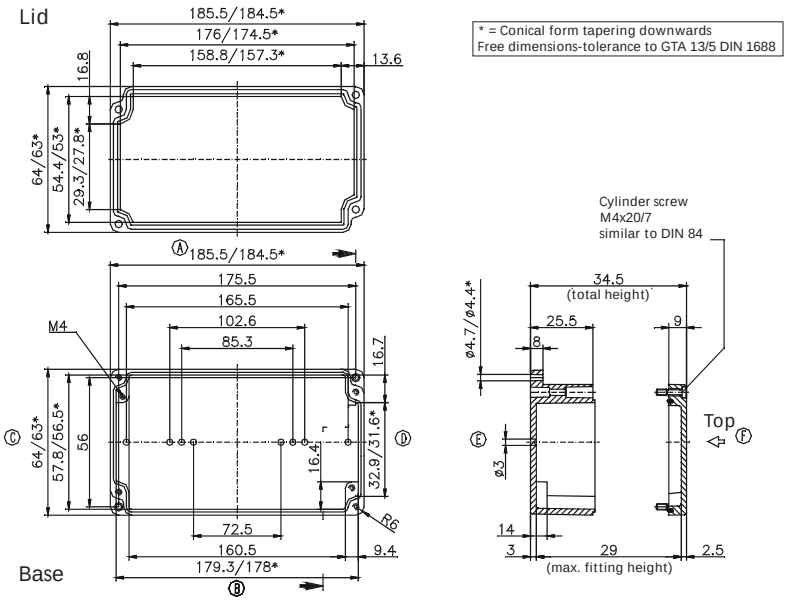


Maximum number of cable glands ***to DIN 50262****

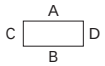


| ***M*** | Corner dim. | Side A/B | Side C/D | ***PG*** | Corner dim. | Side A/B | Side C/D |
|---|---|---|---|---|---|---|---|
| 12 | 17.25 | 10 | 1 | 7 | 17.25 | 10 | 1 |
| 16 | 25.30 | | | 9 | 21.85 | 7 | 1 |
| 20 | 27.60 | | | 11 | 25.30 | | |
| 25 | 37.95 | | | 13.5 | 27.60 | | |
| 32 | 48.30 | | | 16 | 31.05 | | |
| 40 | 60.95 | | | 21 | 37.95 | | |
| 50 | 69.00 | | | 29 | 48.30 | | |
| 63 | 74.75 | | | 36 | 60.95 | | |
| | | | | 42 | 69.00 | | |
| | | | | 48 | 74.75 | | |
| | | | | | | | |

Type: ***01.08 08 06*** External dimensions: ***80 x 75 x 57 mm*** Weight: ***360 g***

| DIN rail length in mm | max. fitting length in mm | Earthing rail clamp | Mounting plate (thickness in mm) | External mounting brackets | External hinge* set | EMC version | Internal hinge* set | SWB / SBG / SBGL Corr.protection | Allen lid screws | Silicone lid seal | Sealable lid screws in steel | Turn bolt fastener on request | Quick lock |
|---|---|---|---|---|---|---|---|---|---|---|---|---|---|
| TS 15 | | | | | | | | | | | | | |
| 63 | 46 | | 1.5 | • | | • | | • | • | • | • | | • |

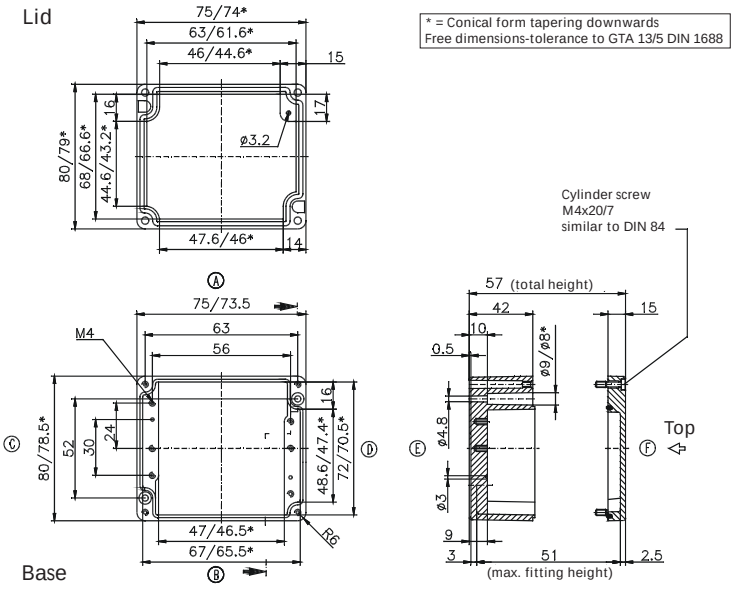


Maximum number of cable glands ***to DIN 50262****

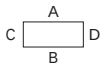


| ***M*** | Corner dim. | Side A/B | Side C/D | ***PG*** | Corner dim. | Side A/B | Side C/D |
|---|---|---|---|---|---|---|---|
| 12 | 17.25 | 3 | 5 | 7 | 17.25 | 2 | 5 |
| 16 | 25.30 | 1 | 2 | 9 | 21.85 | 1 | 2 |
| 20 | 27.60 | 1 | 2 | 11 | 25.30 | 1 | 2 |
| 25 | 37.95 | 1 | 1 | 13.5 | 27.60 | 1 | 2 |
| 32 | 48.30 | | | 16 | 31.05 | 1 | 1 |
| 40 | 60.95 | | | 21 | 37.95 | | |
| 50 | 69.00 | | | 29 | 48.30 | | |
| 63 | 74.75 | | | 36 | 60.95 | | |
| | | | | 42 | 69.00 | | |
| | | | | 48 | 74.75 | | |
| | | | | | | | |

* Please quote mounting side

Type: ***01.08 13 06*** External dimensions: ***80 x 125 x 57 mm*** Weight: ***500 g***

| DIN rail length in mm | max. fitting length in mm | Earthing rail clamp | Mounting plate (thickness in mm) | External mounting brackets | External hinge* set | EMC version | Internal hinge* set | SWB / SBG / SBGL Corr.protection | Allen lid screws | Silicone lid seal | Sealable lid screws in steel | Turn bolt fastener on request | Quick lock |
|---|---|---|---|---|---|---|---|---|---|---|---|---|---|
| TS 15 | | | | | | | | | | | | | |
| 113 | 96 | | 1.5 | • | | • | | • | • | | • | | • |

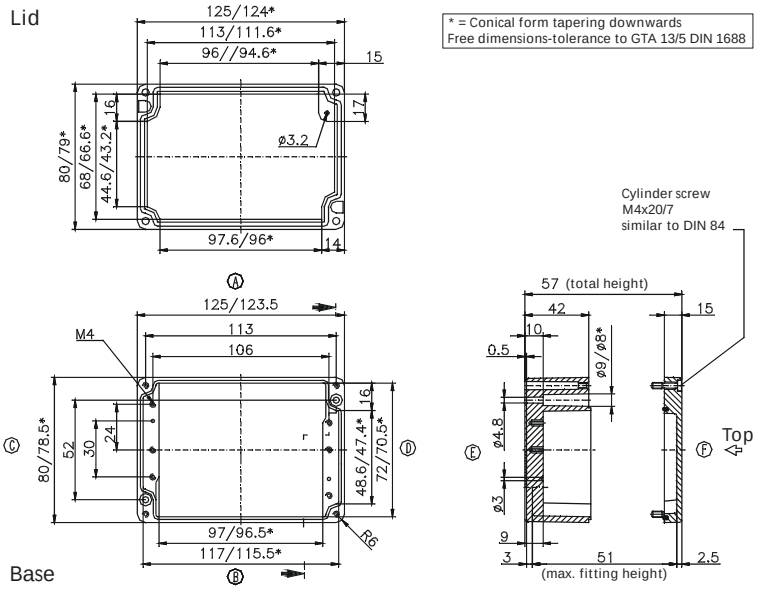


Maximum number of cable glands ***to DIN 50262****

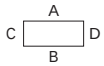


| ***M*** | Corner dim. | Side A/B | Side C/D | ***PG*** | Corner dim. | Side A/B | Side C/D |
|---|---|---|---|---|---|---|---|
| 12 | 17.25 | 9 | 5 | 7 | 17.25 | 8 | 5 |
| 16 | 25.30 | 4 | 2 | 9 | 21.85 | 6 | 2 |
| 20 | 27.60 | 3 | 2 | 11 | 25.30 | 3 | 2 |
| 25 | 37.95 | 2 | 1 | 13.5 | 27.60 | 3 | 2 |
| 32 | 48.30 | | | 16 | 31.05 | 2 | 1 |
| 40 | 60.95 | | | 21 | 37.95 | 2 | |
| 50 | 69.00 | | | 29 | 48.30 | | |
| 63 | 74.75 | | | 36 | 60.95 | | |
| | | | | 42 | 69.00 | | |
| | | | | 48 | 74.75 | | |
| | | | | | | | |

Type: ***01.08 18 06*** External dimensions: ***80 x 175 x 57 mm*** Weight: ***630 g***

| DIN rail length in mm | max. fitting length in mm | Earthing rail clamp | Mounting plate (thickness in mm) | External mounting brackets | External hinge* set | EMC version | Internal hinge* set | SWB / SBG / SBGL Corr.protection | Allen lid screws | Silicone lid seal | Sealable lid screws in steel | Turn bolt fastener on request | Quick lock |
|---|---|---|---|---|---|---|---|---|---|---|---|---|---|
| TS 15 | | | | | | | | | | | | | |
| 163 | 146 | | 1.5 | • | | • | | • | • | • | • | | • |

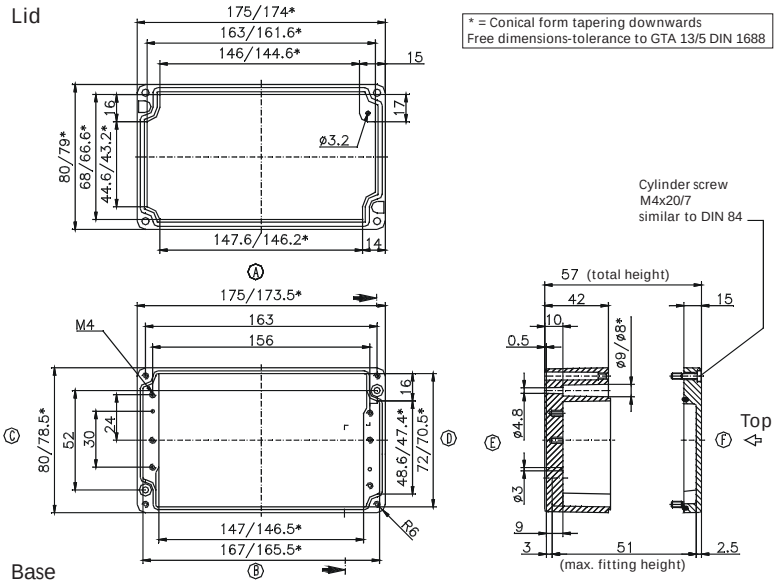


Maximum number of cable glands ***to DIN 50262****

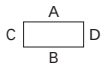


| ***M*** | Corner dim. | Side A/B | Side C/D | ***PG*** | Corner dim. | Side A/B | Side C/D |
|---|---|---|---|---|---|---|---|
| 12 | 17.25 | 14 | 5 | 7 | 17.25 | 14 | 5 |
| 16 | 25.30 | 6 | 2 | 9 | 21.85 | 9 | 2 |
| 20 | 27.60 | 5 | 2 | 11 | 25.30 | 6 | 2 |
| 25 | 37.95 | 3 | 1 | 13.5 | 27.60 | 5 | 2 |
| 32 | 48.30 | | | 16 | 31.05 | 4 | 1 |
| 40 | 60.95 | | | 21 | 37.95 | 3 | |
| 50 | 69.00 | | | 29 | 48.30 | | |
| 63 | 74.75 | | | 36 | 60.95 | | |
| | | | | 42 | 69.00 | | |
| | | | | 48 | 74.75 | | |
| | | | | | | | |

* Please quote mounting side

Type: ***01.08 25 05*** External dimensions: ***80 x 250 x 52 mm*** Weight: ***818 g***

| DIN rail length in mm | max. fitting length in mm | Earthing rail clamp | Mounting plate (thickness in mm) | External mounting brackets | External hinge* set | EMC version | Internal hinge* set | SWB / SBG / SBGL Corr.protection | Allen lid screws | Silicone lid seal | Sealable lid screws in steel | Turn bolt fastener on request | Quick lock |
|---|---|---|---|---|---|---|---|---|---|---|---|---|---|
| TS 15 | | | | | | | | | | | | | |
| 238 | 220 | | | • | | • | | • | • | • | • | | • |

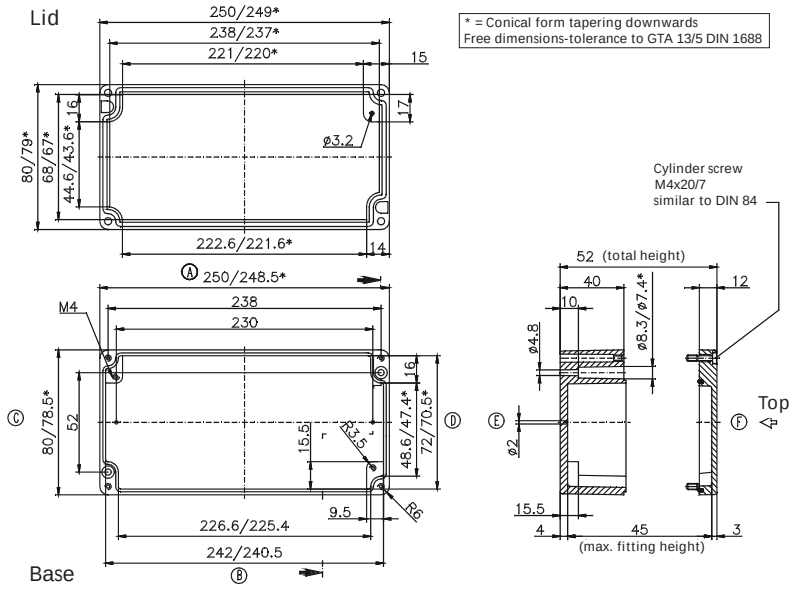


Maximum number of cable glands ***to DIN 50262****

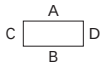


| *M* | Corner dim. | Side A/B | Side C/D | *PG* | Corner dim. | Side A/B | Side C/D |
|---|---|---|---|---|---|---|---|
| 12 | 17.25 | 23 | 6 | 7 | 17.25 | 22 | 6 |
| 16 | 25.30 | 9 | 2 | 9 | 21.85 | 15 | 3 |
| 20 | 27.60 | 8 | 2 | 11 | 25.30 | 9 | 2 |
| 25 | 37.95 | 5 | 1 | 13.5 | 27.60 | 8 | 2 |
| 32 | 48.30 | | | 16 | 31.05 | 6 | 1 |
| 40 | 60.95 | | | 21 | 37.95 | 5 | 1 |
| 50 | 69.00 | | | 29 | 48.30 | | |
| 63 | 74.75 | | | 36 | 60.95 | | |
| | | | | 42 | 69.00 | | |
| | | | | 48 | 74.75 | | |
| | | | | | | | |

Type: ***01.10 10 08*** External dimensions: ***100 x 100 x 81 mm*** Weight: ***800 g***

| DIN rail length in mm | max. fitting length in mm | Earthing rail clamp | Mounting plate (thickness in mm) | External mounting brackets | External hinge* set | EMC version | Internal hinge* set | SWB / SBG / SBGL Corr.protection | Allen lid screws | Silicone lid seal | Sealable lid screws in steel | Turn bolt fastener on request | Quick lock |
|---|---|---|---|---|---|---|---|---|---|---|---|---|---|
| TS 15/35 | | | | | | | | | | | | | |
| 87,5 | 70 | | 1.5 | • | • | • | | • | • | • | • | | • |

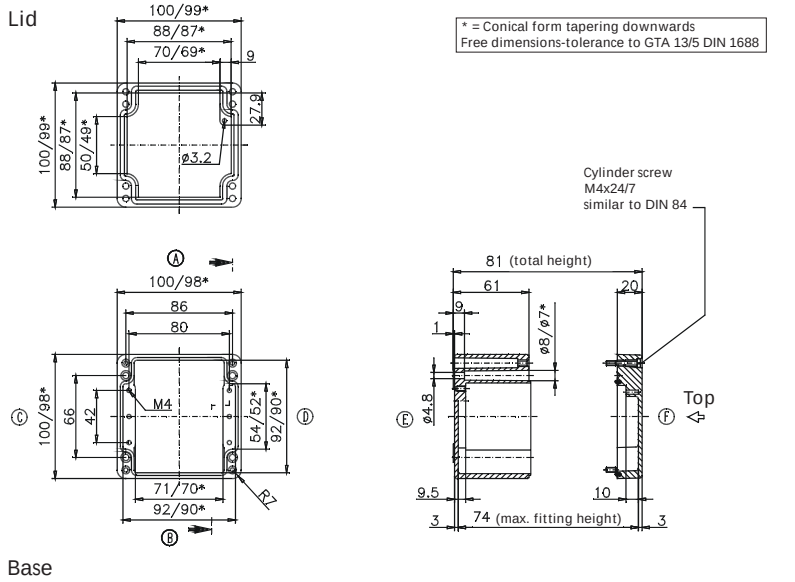


Maximum number of cable glands ***to DIN 50262****

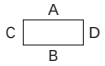


| *M* | Corner dim. | Side A/B | Side C/D | *PG* | Corner dim. | Side A/B | Side C/D |
|---|---|---|---|---|---|---|---|
| 12 | 17.25 | 12 | 9 | 7 | 17.25 | 12 | 9 |
| 16 | 25.30 | 6 | 4 | 9 | 21.85 | 8 | 5 |
| 20 | 27.60 | 5 | 3 | 11 | 25.30 | 5 | 4 |
| 25 | 37.95 | 2 | 1 | 13.5 | 27.60 | 5 | 3 |
| 32 | 48.30 | 1 | 1 | 16 | 31.05 | 4 | 2 |
| 40 | 60.95 | | | 21 | 37.95 | 2 | 1 |
| 50 | 69.00 | | | 29 | 48.30 | 1 | 1 |
| 63 | 74.75 | | | 36 | 60.95 | | |
| | | | | 42 | 69.00 | | |
| | | | | 48 | 74.75 | | |
| | | | | | | | |

* Please quote mounting side

Type: ***01.10 16 08*** External dimensions: ***100 x 160 x 81 mm*** Weight: ***870 g***

| DIN rail length in mm | max. fitting length in mm | Earthing rail clamp | Mounting plate (thickness in mm) | External mounting brackets | External hinge* set | EMC version | Internal hinge* set | SWB / SBG / SBGL Corr.protection | Allen lid screws | Silicone lid seal | Sealable lid screws in steel | Turn bolt fastener on request | Quick lock |
|---|---|---|---|---|---|---|---|---|---|---|---|---|---|
| TS 15/35 | | | | | | | | | | | | | |
| 148 | 130 | | 1.5 | • | • | • | | • | • | | • | | • |

Maximum number of cable glands ***to DIN 50262****

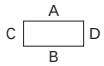


| M | Corner dim. | Side A/B | Side C/D | PG | Corner dim. | Side A/B | Side C/D |
|---|---|---|---|---|---|---|---|
| 12 | 17.25 | 24 | 9 | 7 | 17.25 | 22 | 8 |
| 16 | 25.30 | 11 | 4 | 9 | 21.85 | 17 | 5 |
| 20 | 27.60 | 10 | 3 | 11 | 25.30 | 11 | 4 |
| 25 | 37.95 | 4 | 1 | 13.5 | 27.60 | 10 | 3 |
| 32 | 48.30 | 3 | 1 | 16 | 31.05 | 8 | 2 |
| 40 | 60.95 | | | 21 | 37.95 | 4 | 1 |
| 50 | 69.00 | | | 29 | 48.30 | 3 | 1 |
| 63 | 74.75 | | | 36 | 60.95 | | |
| | | | | 42 | 69.00 | | |
| | | | | 48 | 74.75 | | |
| | | | | | | | |

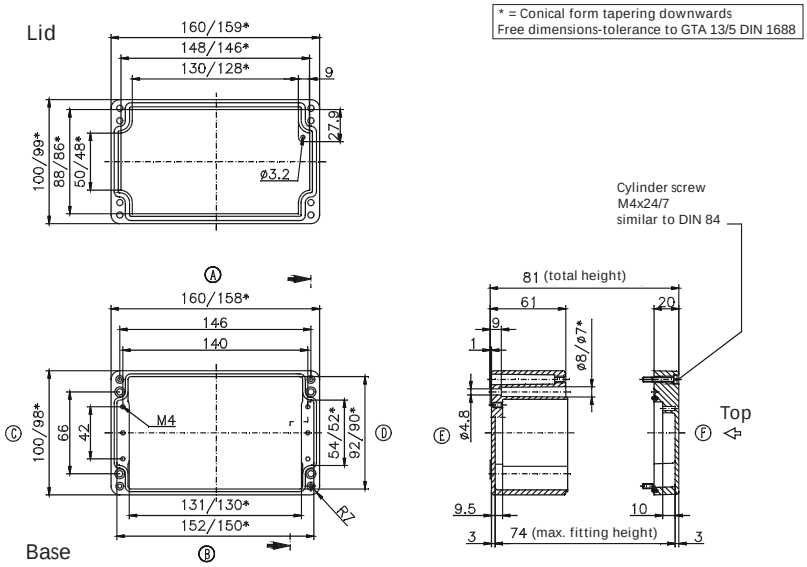


Type: ***01.10 20 08*** External dimensions: ***100 x 200 x 81 mm*** Weight: ***1200 g***

| DIN rail length in mm | max. fitting length in mm | Earthing rail clamp | Mounting plate (thickness in mm) | External mounting brackets | External hinge* set | EMC version | Internal hinge* set | SWB / SBG / SBGL Corr.protection | Allen lid screws | Silicone lid seal | Sealable lid screws in steel | Turn bolt fastener on request | Quick lock |
|---|---|---|---|---|---|---|---|---|---|---|---|---|---|
| TS 15/35 | | | | | | | | | | | | | |
| 188 | 170 | | 1.5 | • | • | • | | • | • | • | • | | • |

Maximum number of cable glands ***to DIN 50262****

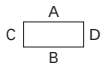


| M | Corner dim. | Side A/B | Side C/D | PG | Corner dim. | Side A/B | Side C/D |
|---|---|---|---|---|---|---|---|
| 12 | 17.25 | 32 | 9 | 7 | 17.25 | 30 | 9 |
| 16 | 25.30 | 14 | 4 | 9 | 21.85 | 21 | 5 |
| 20 | 27.60 | 12 | 3 | 11 | 25.30 | 12 | 4 |
| 25 | 37.95 | 5 | 1 | 13.5 | 27.60 | 12 | 3 |
| 32 | 48.30 | 3 | 1 | 16 | 31.05 | 10 | 2 |
| 40 | 60.95 | | | 21 | 37.95 | 5 | 1 |
| 50 | 69.00 | | | 29 | 48.30 | 3 | 1 |
| 63 | 74.75 | | | 36 | 60.95 | | |
| | | | | 42 | 69.00 | | |
| | | | | 48 | 74.75 | | |
| | | | | | | | |

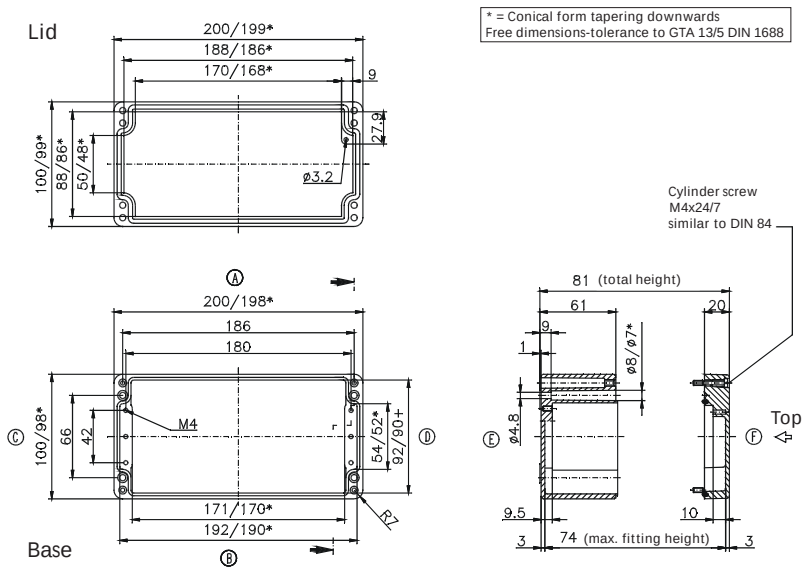


* Please quote mounting side

Type: ***01.12 12 08*** External dimensions: ***120 x 122 x 81 mm*** Weight: ***1044 g***

| DIN rail length in mm | max. fitting length in mm | Earthing rail clamp | Mounting plate (thickness in mm) | External mounting brackets | External hinge* set | EMC version | Internal hinge* set | SWB / SBG / SBGL Corr.protection | Allen lid screws | Silicone lid seal | Sealable lid screws in steel | Turn bolt fastener on request | Quick lock |
|---|---|---|---|---|---|---|---|---|---|---|---|---|---|
| TS 35 | | | | | | | | | | | | | |
| 107 | 85 | 5 | 1.5 | • | • | • | | • | • | • | • | | • |

Maximum number of cable glands ***to DIN 50262****

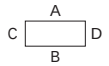


| ***M*** | Corner dim. | Side A/B | Side C/D | ***PG*** | Corner dim. | Side A/B | Side C/D |
|---|---|---|---|---|---|---|---|
| 12 | 17.25 | 10 | 11 | 7 | 17.25 | 10 | 11 |
| 16 | 25.30 | 5 | 5 | 9 | 21.85 | 8 | 6 |
| 20 | 27.60 | 4 | 4 | 11 | 25.30 | 5 | 4 |
| 25 | 37.95 | 2 | 2 | 13.5 | 27.60 | 4 | 3 |
| 32 | 48.30 | 1 | 1 | 16 | 31.05 | 3 | 2 |
| 40 | 60.95 | | | 21 | 37.95 | 2 | 2 |
| 50 | 69.00 | | | 29 | 48.30 | 2 | 1 |
| 63 | 74.75 | | | 36 | 60.95 | | |
| | | | | 42 | 69.00 | | |
| | | | | 48 | 74.75 | | |
| | | | | | | | |

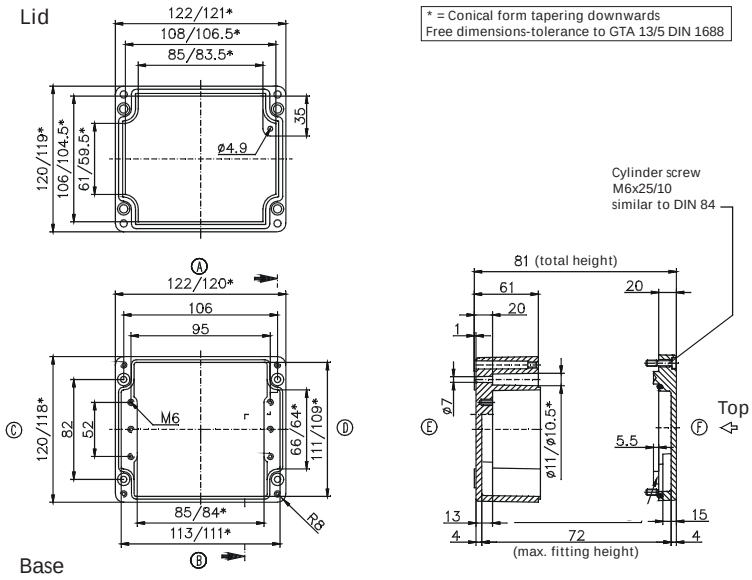


Type: ***01.12 12 09*** External dimensions: ***120 x 122 x 91 mm*** Weight: ***1170 g***

| DIN rail length in mm | max. fitting length in mm | Earthing rail clamp | Mounting plate (thickness in mm) | External mounting brackets | External hinge* set | EMC version | Internal hinge* set | SWB / SBG / SBGL Corr.protection | Allen lid screws | Silicone lid seal | Sealable lid screws in steel | Turn bolt fastener on request | Quick lock |
|---|---|---|---|---|---|---|---|---|---|---|---|---|---|
| TS 35 | | | | | | | | | | | | | |
| 107 | 85 | 5 | 1.5 | • | • | • | | • | • | • | • | | • |

Maximum number of cable glands ***to DIN 50262****

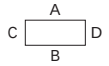


| ***M*** | Corner dim. | Side A/B | Side C/D | ***PG*** | Corner dim. | Side A/B | Side C/D |
|---|---|---|---|---|---|---|---|
| 12 | 17.25 | 10 | 11 | 7 | 17.25 | 10 | 11 |
| 16 | 25.30 | 5 | 5 | 9 | 21.85 | 8 | 6 |
| 20 | 27.60 | 4 | 4 | 11 | 25.30 | 5 | 4 |
| 25 | 37.95 | 2 | 2 | 13.5 | 27.60 | 4 | 3 |
| 32 | 48.30 | 1 | 1 | 16 | 31.05 | 3 | 2 |
| 40 | 60.95 | | | 21 | 37.95 | 2 | 2 |
| 50 | 69.00 | | | 29 | 48.30 | 1 | 1 |
| 63 | 74.75 | | | 36 | 60.95 | | |
| | | | | 42 | 69.00 | | |
| | | | | 48 | 74.75 | | |
| | | | | | | | |

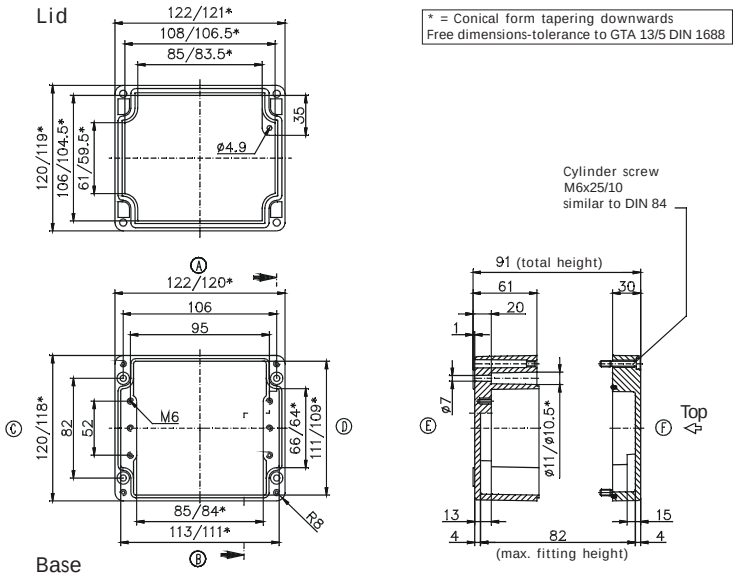


* Please quote mounting side

Type: **01.12 22 08** External dimensions: **120 x 220 x 81 mm** Weight: **1445 g**

| DIN rail length in mm | max. fitting length in mm | Earthing rail clamp | Mounting plate (thickness in mm) | External mounting brackets | External hinge* set | EMC version | Internal hinge* set | SWB / SBG / SBGL Corr.protection | Allen lid screws | Silicone lid seal | Sealable lid screws in steel | Turn bolt fastener on request | Quick lock |
|---|---|---|---|---|---|---|---|---|---|---|---|---|---|
| TS 35 | | | | | | | | | | | | | |
| 205 | 183 | 13 | 1.5 | • | • | • | | • | • | • | • | | • |

Maximum number of cable glands ***to DIN 50262****

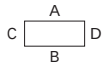


| M | Corner dim. | Side A/B | Side C/D | PG | Corner dim. | Side A/B | Side C/D |
|---|---|---|---|---|---|---|---|
| 12 | 17.25 | 30 | 11 | 7 | 17.25 | 30 | 11 |
| 16 | 25.30 | 12 | 6 | 9 | 21.85 | 20 | 6 |
| 20 | 27.60 | 12 | 4 | 11 | 25.30 | 12 | 4 |
| 25 | 37.95 | 5 | 2 | 13.5 | 27.60 | 12 | 4 |
| 32 | 48.30 | 3 | 1 | 16 | 31.05 | 10 | 2 |
| 40 | 60.95 | | | 21 | 37.95 | 5 | 2 |
| 50 | 69.00 | | | 29 | 48.30 | 3 | 1 |
| 63 | 74.75 | | | 36 | 60.95 | | |
| | | | | 42 | 69.00 | | |
| | | | | 48 | 74.75 | | |
| | | | | | | | |

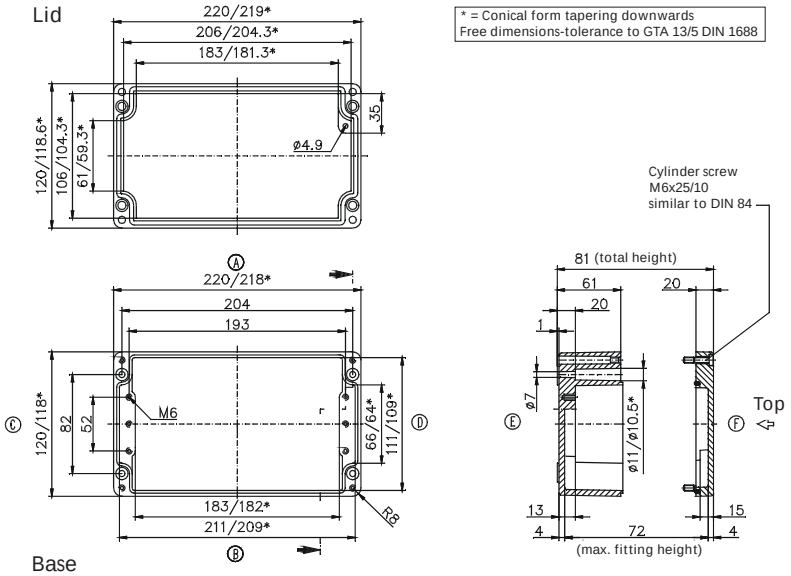


Type: **01.12 22 09** External dimensions: **120 x 220 x 91 mm** Weight: **1800 g**

| DIN rail length in mm | max. fitting length in mm | Earthing rail clamp | Mounting plate (thickness in mm) | External mounting brackets | External hinge* set | EMC version | Internal hinge* set | SWB / SBG / SBGL Corr.protection | Allen lid screws | Silicone lid seal | Sealable lid screws in steel | Turn bolt fastener on request | Quick lock |
|---|---|---|---|---|---|---|---|---|---|---|---|---|---|
| TS 35 | | | | | | | | | | | | | |
| 205 | 183 | 13 | 1.5 | • | • | • | | • | • | • | • | | • |

Maximum number of cable glands ***to DIN 50262****

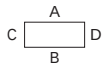


| M | Corner dim. | Side A/B | Side C/D | PG | Corner dim. | Side A/B | Side C/D |
|---|---|---|---|---|---|---|---|
| 12 | 17.25 | 34 | 11 | 7 | 17.25 | 34 | 11 |
| 16 | 25.30 | 15 | 6 | 9 | 21.85 | 24 | 6 |
| 20 | 27.60 | 14 | 4 | 11 | 25.30 | 15 | 4 |
| 25 | 37.95 | 6 | 2 | 13.5 | 27.60 | 14 | 4 |
| 32 | 48.30 | 4 | 1 | 16 | 31.05 | 11 | 2 |
| 40 | 60.95 | | | 21 | 37.95 | 6 | 2 |
| 50 | 69.00 | | | 29 | 48.30 | 4 | 1 |
| 63 | 74.75 | | | 36 | 60.95 | | |
| | | | | 42 | 69.00 | | |
| | | | | 48 | 74.75 | | |
| | | | | | | | |

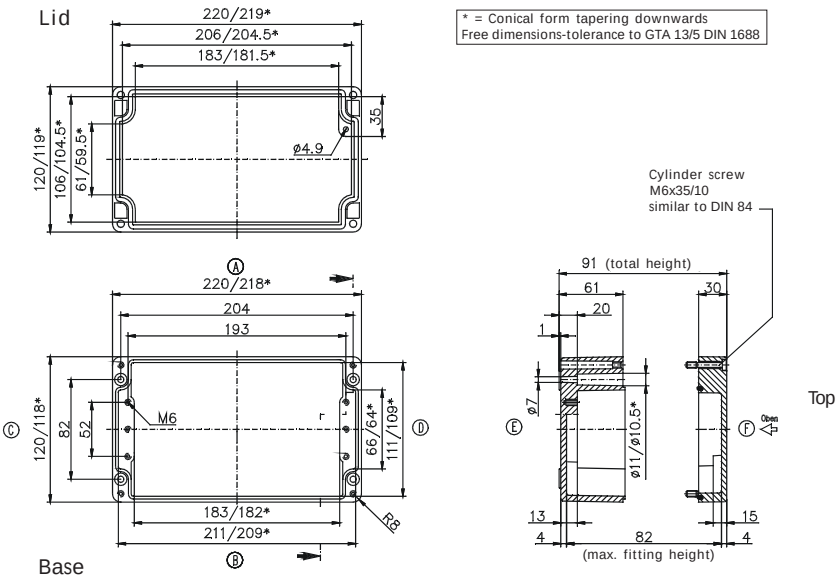


* Please quote mounting side

Type: ***01.12 22 12*** External dimensions: ***120 x 220 x 118 mm*** Weight: ***1410 g***

| DIN rail length in mm | max. fitting length in mm | Earthing rail clamp | Mounting plate (thickness in mm) | External mounting brackets | External hinge* set | EMC version | Internal hinge* set | SWB / SBG / SBGL Corr.protection | Allen lid screws | Silicone lid seal | Sealable lid screws in steel | Turn bolt fastener on request | Quick lock |
|---|---|---|---|---|---|---|---|---|---|---|---|---|---|
| TS 35 | | | | | | | | | | | | | |
| 208 | 183 | 13 | 1.5 | • | • | • | | • | • | • | • | | • |

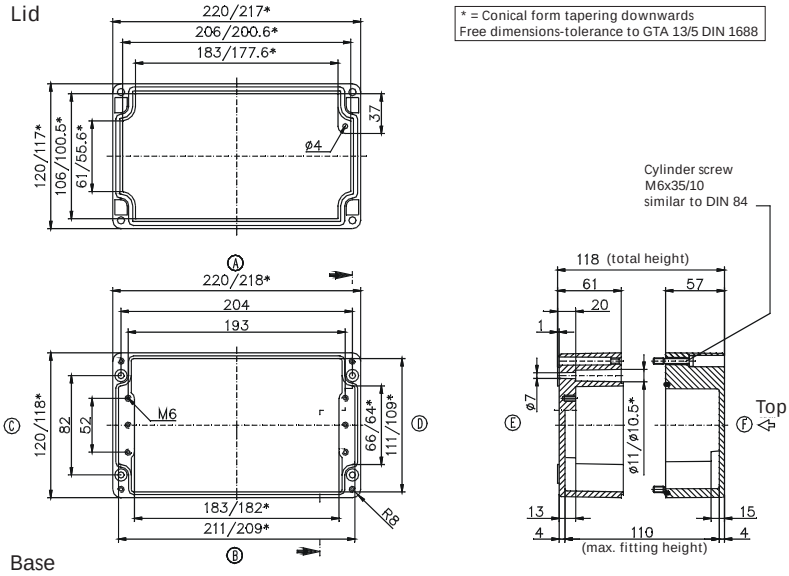


Maximum number of cable glands ***to DIN 50262****

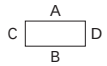


| *M* | Corner dim. | Side A/B | Side C/D | *PG* | Corner dim. | Side A/B | Side C/D |
|---|---|---|---|---|---|---|---|
| 12 | 17.25 | 34 | 11 | 7 | 17.25 | 34 | 11 |
| 16 | 25.30 | 15 | 6 | 9 | 21.85 | 24 | 6 |
| 20 | 27.60 | 14 | 4 | 11 | 25.30 | 15 | 4 |
| 25 | 37.95 | 6 | 2 | 13.5 | 27.60 | 14 | 4 |
| 32 | 48.30 | 4 | 1 | 16 | 31.05 | 11 | 2 |
| 40 | 60.95 | | | 21 | 37.95 | 6 | 2 |
| 50 | 69.00 | | | 29 | 48.30 | 4 | 1 |
| 63 | 74.75 | | | 36 | 60.95 | | |
| | | | | 42 | 69.00 | | |
| | | | | 48 | 74.75 | | |
| | | | | | | | |

Type: ***01.12 36 08*** External dimensions: ***120 x 360 x 81 mm*** Weight: ***2100 g***

| DIN rail length in mm | max. fitting length in mm | Earthing rail clamp | Mounting plate (thickness in mm) | External mounting brackets | External hinge* set | EMC version | Internal hinge* set | SWB / SBG / SBGL Corr.protection | Allen lid screws | Silicone lid seal | Sealable lid screws in steel | Turn bolt fastener on request | Quick lock |
|---|---|---|---|---|---|---|---|---|---|---|---|---|---|
| TS 35 | | | | | | | | | | | | | |
| 343 | 323 | 23 | 1.5 | • | • | • | | • | • | • | • | | • |

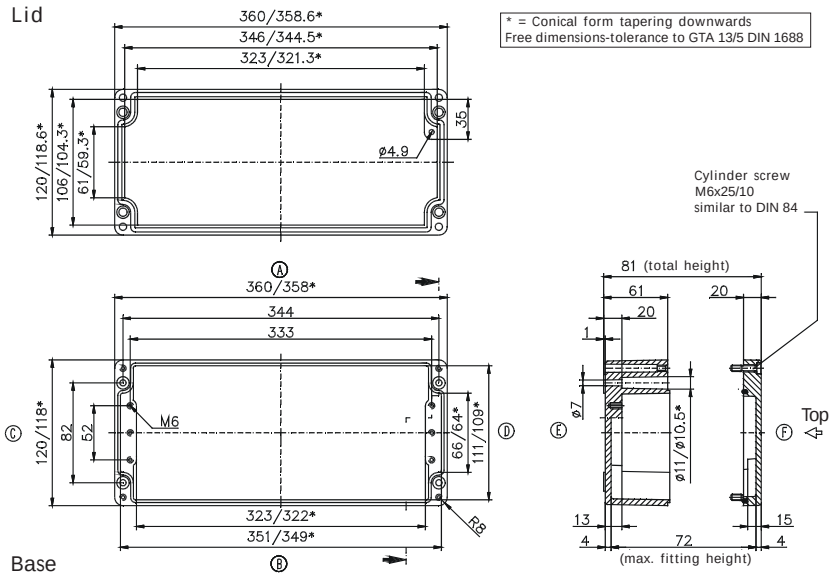


Maximum number of cable glands ***to DIN 50262****

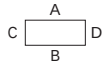


| *M* | Corner dim. | Side A/B | Side C/D | *PG* | Corner dim. | Side A/B | Side C/D |
|---|---|---|---|---|---|---|---|
| 12 | 17.25 | 58 | 11 | 7 | 17.25 | 58 | 11 |
| 16 | 25.30 | 26 | 5 | 9 | 21.85 | 41 | 6 |
| 20 | 27.60 | 24 | 4 | 11 | 25.30 | 26 | 4 |
| 25 | 37.95 | 10 | 2 | 13.5 | 27.60 | 24 | 3 |
| 32 | 48.30 | 7 | 1 | 16 | 31.05 | 20 | 2 |
| 40 | 60.95 | | | 21 | 37.95 | 10 | 2 |
| 50 | 69.00 | | | 29 | 48.30 | 7 | 1 |
| 63 | 74.75 | | | 36 | 60.95 | | |
| | | | | 42 | 69.00 | | |
| | | | | 48 | 74.75 | | |
| | | | | | | | |

* Please quote mounting side

Type: **01.14 14 09** External dimensions: **140 x 140 x 91 mm** Weight: **1470 g**

| DIN rail length in mm | max. fitting length in mm | Earthing rail clamp | Mounting plate (thickness in mm) | External mounting brackets | External hinge* set | EMC version | Internal hinge* set | SWB / SBG / SBGL Corr.protection | Allen lid screws | Silicone lid seal | Sealable lid screws in steel | Turn bolt fastener on request | Quick lock |
|---|---|---|---|---|---|---|---|---|---|---|---|---|---|
| TS 35 | | | | | | | | | | | | | |
| 126 | 100 | 6 | 1.5 | • | • | • | | • | • | • | • | | • |

Maximum number of cable glands ***to DIN 50262****

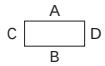


| M | Corner dim. | Side A/B | Side C/D | PG | Corner dim. | Side A/B | Side C/D |
|---|---|---|---|---|---|---|---|
| 12 | 17.25 | 18 | 12 | 7 | 17.25 | 18 | 12 |
| 16 | 25.30 | 8 | 6 | 9 | 21.85 | 12 | 6 |
| 20 | 27.60 | 8 | 4 | 11 | 25.30 | 8 | 5 |
| 25 | 37.95 | 3 | 2 | 13.5 | 27.60 | 8 | 4 |
| 32 | 48.30 | 2 | 1 | 16 | 31.05 | 6 | 3 |
| 40 | 60.95 | | | 21 | 37.95 | 3 | 2 |
| 50 | 69.00 | | | 29 | 48.30 | 2 | 1 |
| 63 | 74.75 | | | 36 | 60.95 | | |
| | | | | 42 | 69.00 | | |
| | | | | 48 | 74.75 | | |
| | | | | | | | |

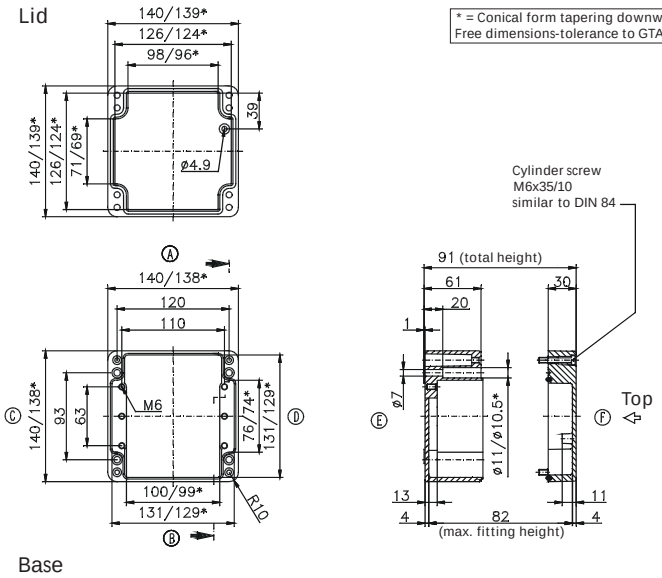


Type: **01.14 20 09** External dimensions: **140 x 200 x 91 mm** Weight: **1760 g**

| DIN rail length in mm | max. fitting length in mm | Earthing rail clamp | Mounting plate (thickness in mm) | External mounting brackets | External hinge* set | EMC version | Internal hinge* set | SWB / SBG / SBGL Corr.protection | Allen lid screws | Silicone lid seal | Sealable lid screws in steel | Turn bolt fastener on request | Quick lock |
|---|---|---|---|---|---|---|---|---|---|---|---|---|---|
| TS 35 | | | | | | | | | | | | | |
| 186 | 160 | 12 | 1.5 | • | • | • | | • | • | • | • | | • |

Maximum number of cable glands ***to DIN 50262****

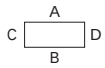


| M | Corner dim. | Side A/B | Side C/D | PG | Corner dim. | Side A/B | Side C/D |
|---|---|---|---|---|---|---|---|
| 12 | 17.25 | 28 | 12 | 7 | 17.25 | 28 | 12 |
| 16 | 25.30 | 12 | 6 | 9 | 21.85 | 20 | 6 |
| 20 | 27.60 | 12 | 4 | 11 | 25.30 | 12 | 6 |
| 25 | 37.95 | 5 | 2 | 13.5 | 27.60 | 12 | 4 |
| 32 | 48.30 | 3 | 1 | 16 | 31.05 | 10 | 3 |
| 40 | 60.95 | | | 21 | 37.95 | 5 | 2 |
| 50 | 69.00 | | | 29 | 48.30 | 3 | 1 |
| 63 | 74.75 | | | 36 | 60.95 | | |
| | | | | 42 | 69.00 | | |
| | | | | 48 | 74.75 | | |
| | | | | | | | |

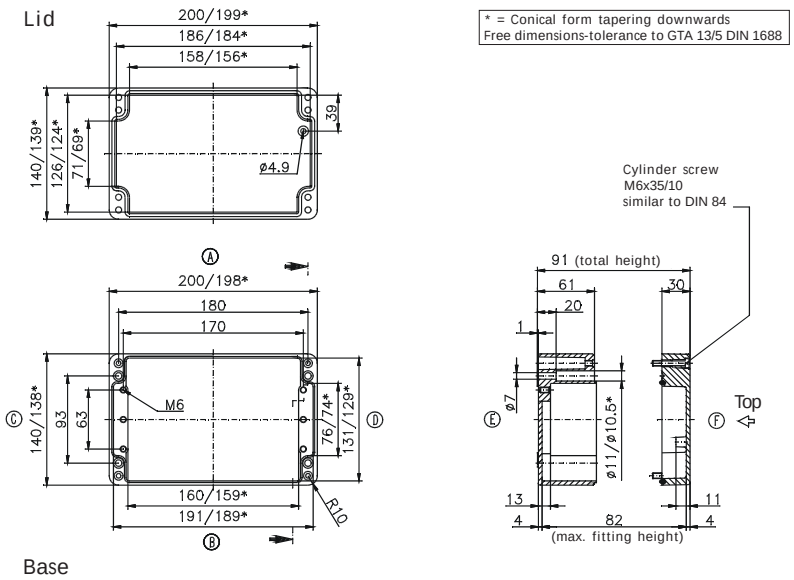


* Please quote mounting side

Type: ***01.16 16 09*** External dimensions: ***160 x 160 x 91 mm*** Weight: ***1760 g***

| DIN rail length in mm | max. fitting length in mm | Earthing rail clamp | Mounting plate (thickness in mm) | External mounting brackets | External hinge* set | EMC version | Internal hinge* set | SWB / SBG / SBGL Corr.protection | Allen lid screws | Silicone lid seal | Sealable lid screws in steel | Turn bolt fastener on request | Quick lock |
|---|---|---|---|---|---|---|---|---|---|---|---|---|---|
| TS 35 | | | | | | | | | | | | | |
| 144 | 120 | 8 | 1.5 | • | • | • | • | • | • | • | • | • | • |

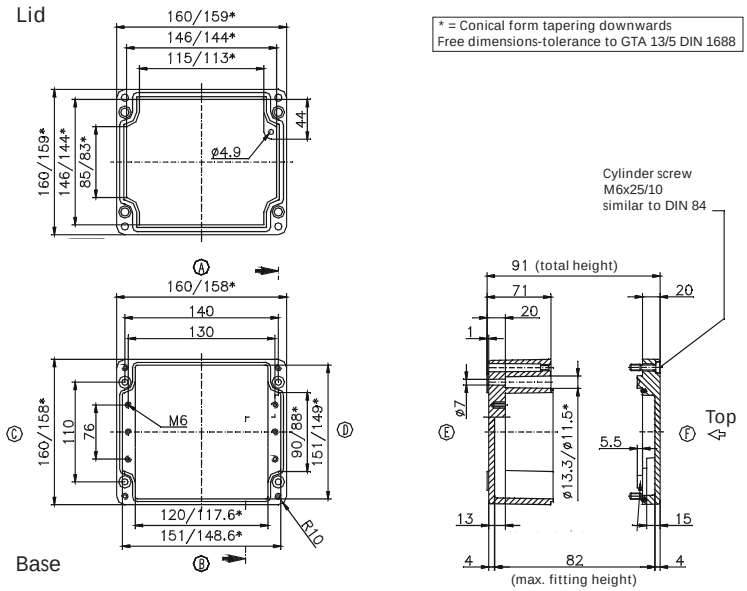


Maximum number of cable glands ***to DIN 50262****

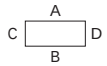


| ***M*** | Corner dim. | Side A / B | Side C / D | ***PG*** | Corner dim. | Side A / B | Side C / D |
|---|---|---|---|---|---|---|---|
| 12 | 17.25 | 26 | 16 | 7 | 17.25 | 26 | 16 |
| 16 | 25.30 | 12 | 8 | 9 | 21.85 | 15 | 11 |
| 20 | 27.60 | 9 | 6 | 11 | 25.30 | 12 | 6 |
| 25 | 37.95 | 5 | 3 | 13.5 | 27.60 | 9 | 6 |
| 32 | 48.30 | 3 | 2 | 16 | 31.05 | 8 | 5 |
| 40 | 60.95 | 2 | 1 | 21 | 37.95 | 5 | 3 |
| 50 | 69.00 | 2 | | 29 | 48.30 | 2 | 2 |
| 63 | 74.75 | | | 36 | 60.95 | 2 | 1 |
| | | | | 42 | 69.00 | 1 | |
| | | | | 48 | 74.75 | | |
| | | | | | | | |

Type: ***01.16 26 09*** External dimensions: ***160 x 260 x 91 mm*** Weight: ***2300 g***

| DIN rail length in mm | max. fitting length in mm | Earthing rail clamp | Mounting plate (thickness in mm) | External mounting brackets | External hinge* set | EMC version | Internal hinge* set | SWB / SBG / SBGL Corr.protection | Allen lid screws | Silicone lid seal | Sealable lid screws in steel | Turn bolt fastener on request | Quick lock |
|---|---|---|---|---|---|---|---|---|---|---|---|---|---|
| TS 35 | | | | | | | | | | | | | |
| 245 | 220 | 16 | 1.5 | • | • | • | • | • | • | • | • | • | • |

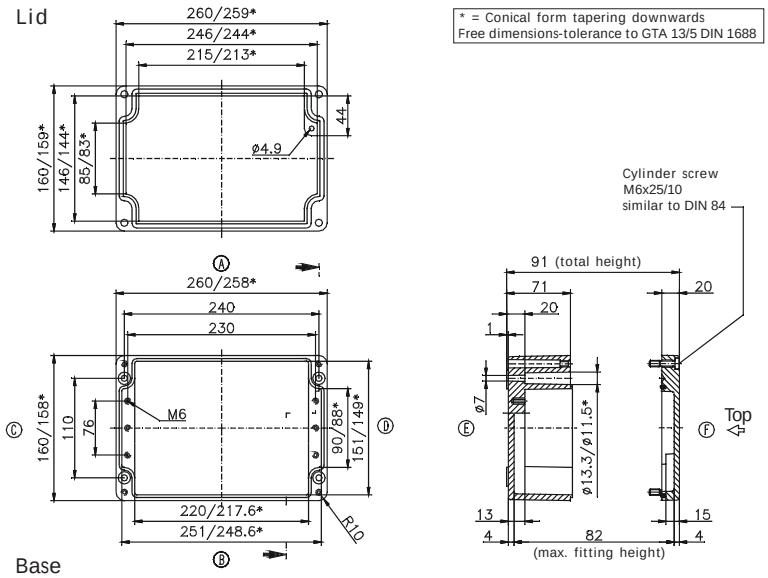


Maximum number of cable glands ***to DIN 50262****

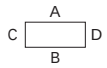


| ***M*** | Corner dim. | Side A / B | Side C / D | ***PG*** | Corner dim. | Side A / B | Side C / D |
|---|---|---|---|---|---|---|---|
| 12 | 17.25 | 50 | 16 | 7 | 17.25 | 50 | 16 |
| 16 | 25.30 | 24 | 8 | 9 | 21.85 | 30 | 11 |
| 20 | 27.60 | 17 | 6 | 11 | 25.30 | 23 | 6 |
| 25 | 37.95 | 10 | 3 | 13.5 | 27.60 | 17 | 6 |
| 32 | 48.30 | 5 | 2 | 16 | 31.05 | 14 | 5 |
| 40 | 60.95 | 3 | 1 | 21 | 37.95 | 9 | 3 |
| 50 | 69.00 | 3 | | 29 | 48.30 | 5 | 2 |
| 63 | 74.75 | | | 36 | 60.95 | 3 | 1 |
| | | | | 42 | 69.00 | 3 | |
| | | | | 48 | 74.75 | | |
| | | | | | | | |

* Please quote mounting side

Type: **01.16 36 09** External dimensions: ***160 x 360 x 91 mm*** Weight: ***2940 g***

| DIN rail length in mm | max. fitting length in mm | Earthing rail clamp | Mounting plate (thickness in mm) | External mounting brackets | External hinge* set | EMC version | Internal hinge* set | SWB / SBG / SBGL Corr.protection | Allen lid screws | Silicone lid seal | Sealable lid screws in steel | Turn bolt fastener on request | Quick lock |
|---|---|---|---|---|---|---|---|---|---|---|---|---|---|
| TS 35 | | | | | | | | | | | | | |
| 343 | 320 | 23 | 1.5 | • | • | • | • | • | • | • | • | • | • |

Maximum number of cable glands ***to DIN 50262****

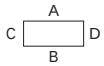


| M | Corner dim. | Side A/B | Side C/D | PG | Corner dim. | Side A/B | Side C/D |
|---|---|---|---|---|---|---|---|
| 12 | 17.25 | 72 | 16 | 7 | 17.25 | 72 | 16 |
| 16 | 25.30 | 36 | 8 | 9 | 21.85 | 42 | 11 |
| 20 | 27.60 | 24 | 6 | 11 | 25.30 | 33 | 6 |
| 25 | 37.95 | 15 | 3 | 13.5 | 27.60 | 24 | 6 |
| 32 | 48.30 | 7 | 2 | 16 | 31.05 | 20 | 5 |
| 40 | 60.95 | 5 | 1 | 21 | 37.95 | 14 | 3 |
| 50 | 69.00 | 4 | | 29 | 48.30 | 7 | 2 |
| 63 | 74.75 | | | 36 | 60.95 | 5 | 1 |
| | | | | 42 | 69.00 | 4 | |
| | | | | 48 | 74.75 | | |
| | | | | | | | |

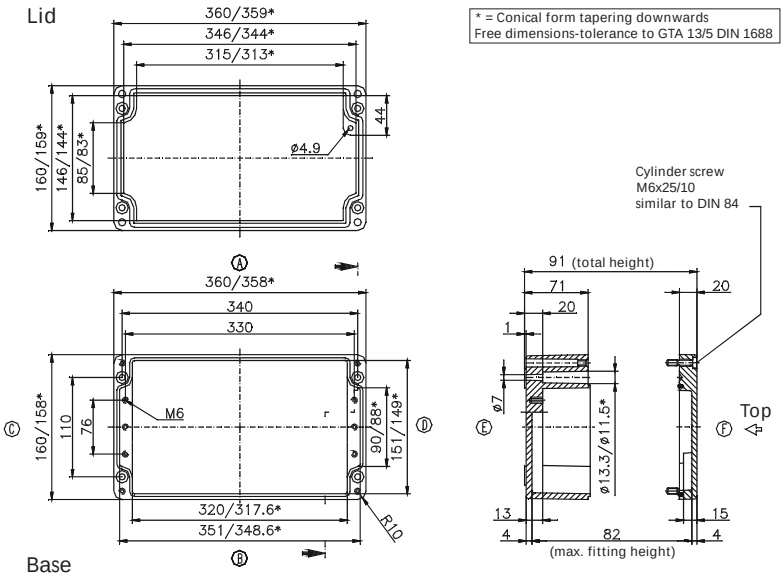


Type: **01.16 56 09** External dimensions: ***160 x 560 x 91 mm*** Weight: ***4457 g***

| DIN rail length in mm | max. fitting length in mm | Earthing rail clamp | Mounting plate (thickness in mm) | External mounting brackets | External hinge* set | EMC version | Internal hinge* set | SWB / SBG / SBGL Corr.protection | Allen lid screws | Silicone lid seal | Sealable lid screws in steel | Turn bolt fastener on request | Quick lock |
|---|---|---|---|---|---|---|---|---|---|---|---|---|---|
| TS 35 | | | | | | | | | | | | | |
| 543 | 520 | 38 | 2 | • | • | • | • | • | • | • | • | • | • |

Maximum number of cable glands ***to DIN 50262****

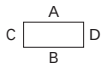


| M | Corner dim. | Side A/B | Side C/D | PG | Corner dim. | Side A/B | Side C/D |
|---|---|---|---|---|---|---|---|
| 12 | 17.25 | 104 | 16 | 7 | 17.25 | 104 | 16 |
| 16 | 25.30 | 58 | 8 | 9 | 21.85 | 66 | 11 |
| 20 | 27.60 | 40 | 62 | 11 | 25.30 | 58 | 6 |
| 25 | 37.95 | 24 | 3 | 13.5 | 27.60 | 40 | 6 |
| 32 | 48.30 | 12 | 2 | 16 | 31.05 | 32 | 5 |
| 40 | 60.95 | 8 | 1 | 21 | 37.95 | 24 | 3 |
| 50 | 69.00 | 6 | | 29 | 48.30 | 12 | 2 |
| 63 | 74.75 | | | 36 | 60.95 | 8 | 1 |
| | | | | 42 | 69.00 | 6 | |
| | | | | 48 | 74.75 | | |
| | | | | | | | |

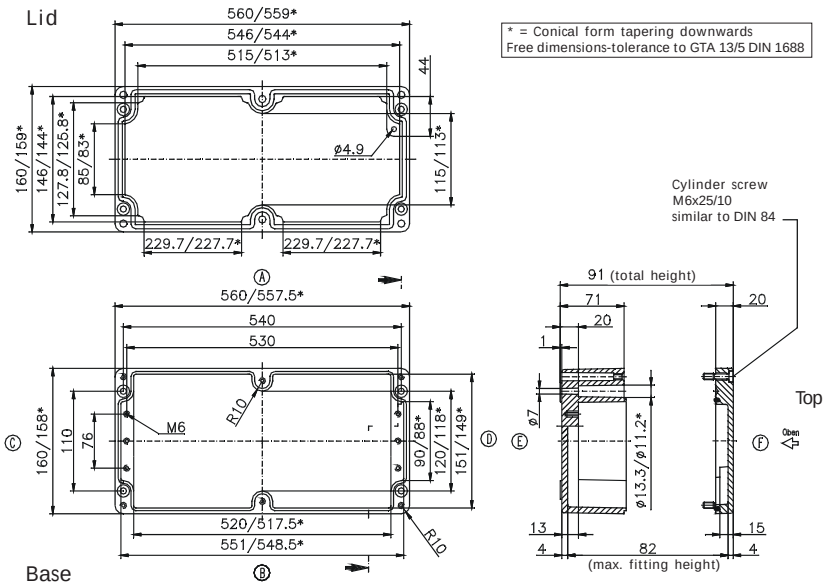


* Please quote mounting side

Type: ***01.18 18 10*** External dimensions: ***180 x 180 x 101 mm*** Weight: ***2400 g***

| DIN rail length in mm | max. fitting length in mm | Earthing rail clamp | Mounting plate (thickness in mm) | External mounting brackets | External hinge* set | EMC version | Internal hinge* set | SWB / SBG / SBGL Corr.protection | Allen lid screws | Silicone lid seal | Sealable lid screws in steel | Turn bolt fastener on request | Quick lock |
|---|---|---|---|---|---|---|---|---|---|---|---|---|---|
| TS 35 | | | | | | | | | | | | | |
| 166 | 140 | 8 | 1.5 | • | • | • | • | • | • | • | • | • | • |

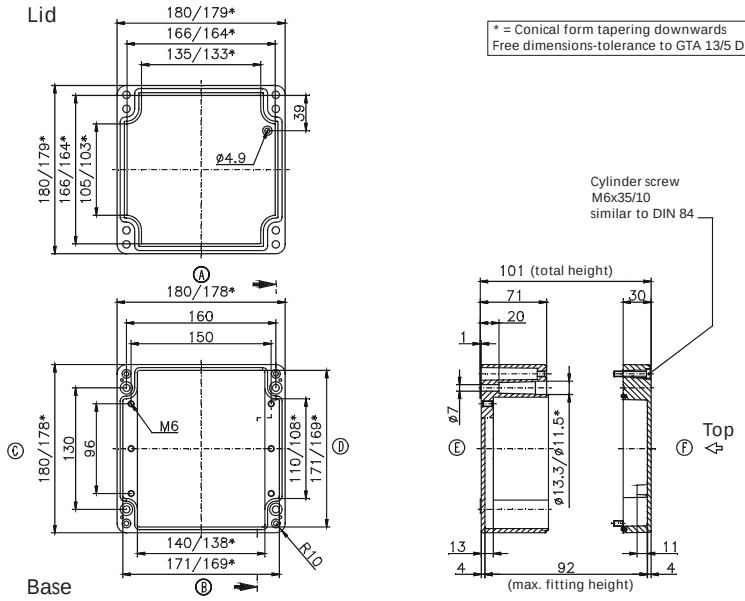


* = Conical form tapering downwards
Free dimensions-tolerance to GTA 13/5 DIN 1688

Maximum number of cable glands ***to DIN 50262****

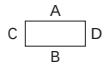


| ***M*** | Corner dim. | Side A/B | Side C/D | ***PG*** | Corner dim. | Side A/B | Side C/D |
|---|---|---|---|---|---|---|---|
| 12 | 17.25 | 30 | 20 | 7 | 17.25 | 28 | 20 |
| 16 | 25.30 | 15 | 9 | 9 | 21.85 | 18 | 14 |
| 20 | 27.60 | 11 | 8 | 11 | 25.30 | 15 | 8 |
| 25 | 37.95 | 6 | 3 | 13.5 | 27.60 | 11 | 8 |
| 32 | 48.30 | 3 | 2 | 16 | 31.05 | 8 | 6 |
| 40 | 60.95 | 2 | 2 | 21 | 37.95 | 6 | 3 |
| 50 | 69.00 | 2 | | 29 | 48.30 | 3 | 2 |
| 63 | 74.75 | | | 36 | 60.95 | 2 | 2 |
| | | | | 42 | 69.00 | 2 | |
| | | | | 48 | 74.75 | | |
| | | | | | | | |

Type: ***01.18 28 10*** External dimensions: ***180 x 280 x 101 mm*** Weight: ***3000 g***

| DIN rail length in mm | max. fitting length in mm | Earthing rail clamp | Mounting plate (thickness in mm) | External mounting brackets | External hinge* set | EMC version | Internal hinge* set | SWB / SBG / SBGL Corr.protection | Allen lid screws | Silicone lid seal | Sealable lid screws in steel | Turn bolt fastener on request | Quick lock |
|---|---|---|---|---|---|---|---|---|---|---|---|---|---|
| TS 35 | | | | | | | | | | | | | |
| 264 | 240 | 16 | 1.5 | • | • | • | • | • | • | • | • | • | • |

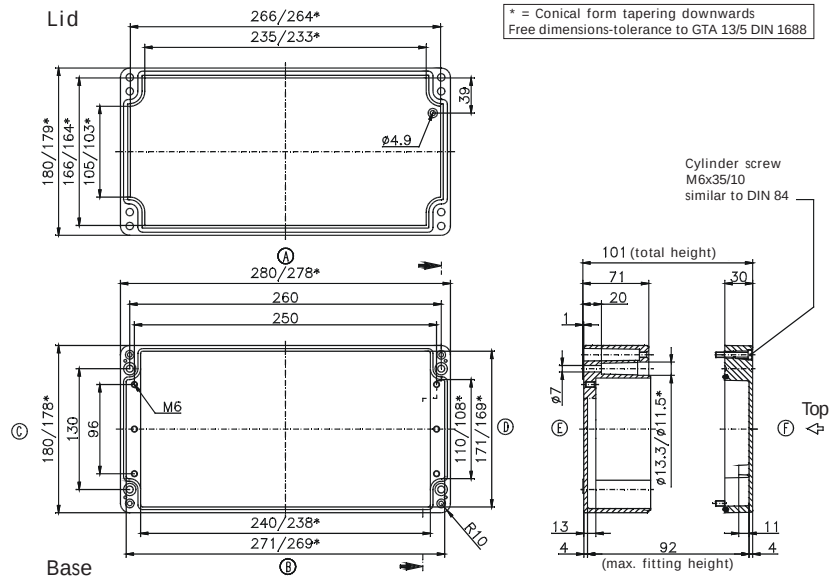


* = Conical form tapering downwards
Free dimensions-tolerance to GTA 13/5 DIN 1688

Maximum number of cable glands ***to DIN 50262****

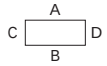


| ***M*** | Corner dim. | Side A/B | Side C/D | ***PG*** | Corner dim. | Side A/B | Side C/D |
|---|---|---|---|---|---|---|---|
| 12 | 17.25 | 52 | 22 | 7 | 17.25 | 52 | 22 |
| 16 | 25.30 | 26 | 10 | 9 | 21.85 | 33 | 15 |
| 20 | 27.60 | 18 | 8 | 11 | 25.30 | 23 | 10 |
| 25 | 37.95 | 11 | 4 | 13.5 | 27.60 | 18 | 8 |
| 32 | 48.30 | 5 | 2 | 16 | 31.05 | 14 | 7 |
| 40 | 60.95 | 4 | 2 | 21 | 37.95 | 10 | 4 |
| 50 | 69.00 | 3 | | 29 | 48.30 | 5 | 2 |
| 63 | 74.75 | | | 36 | 60.95 | 4 | 2 |
| | | | | 42 | 69.00 | 3 | |
| | | | | 48 | 74.75 | | |
| | | | | | | | |

* Please quote mounting side

Type: **01.23 10 11** External dimensions: ***230 x 100 x 111 mm*** Weight: ***2300 g***

| DIN rail length in mm | max. fitting length in mm | Earthing rail clamp | Mounting plate (thickness in mm) | External mounting brackets | External hinge* set | EMC version | Internal hinge* set | SWB / SBG / SBGL Corr.protection | Allen lid screws | Silicone lid seal | Sealable lid screws in steel | Turn bolt fastener on request | Quick lock |
|---|---|---|---|---|---|---|---|---|---|---|---|---|---|
| TS 35 | | | | | | | | | | | | | |
| 214 | 190 | | 1.5 | • | • | • | • | • | • | • | • | • | • |

Maximum number of cable glands ***to DIN 50262****

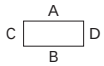


| M | Corner dim. | Side A/B | Side C/D | PG | Corner dim. | Side A/B | Side C/D |
|---|---|---|---|---|---|---|---|
| 12 | 17.25 | 15 | 45 | 7 | 17.25 | 15 | 45 |
| 16 | 25.30 | 8 | 18 | 9 | 21.85 | 10 | 28 |
| 20 | 27.60 | 6 | 17 | 11 | 25.30 | 6 | 18 |
| 25 | 37.95 | 3 | 8 | 13.5 | 27.60 | 6 | 17 |
| 32 | 48.30 | 2 | 5 | 16 | 31.05 | 5 | 12 |
| 40 | 60.95 | 1 | 3 | 21 | 37.95 | 3 | 8 |
| 50 | 69.00 | 1 | 2 | 29 | 48.30 | 1 | 4 |
| 63 | 74.75 | | 2 | 36 | 60.95 | 1 | 3 |
| | | | | 42 | 69.00 | 1 | 2 |
| | | | | 48 | 74.75 | 1 | 2 |
| | | | | | | | |

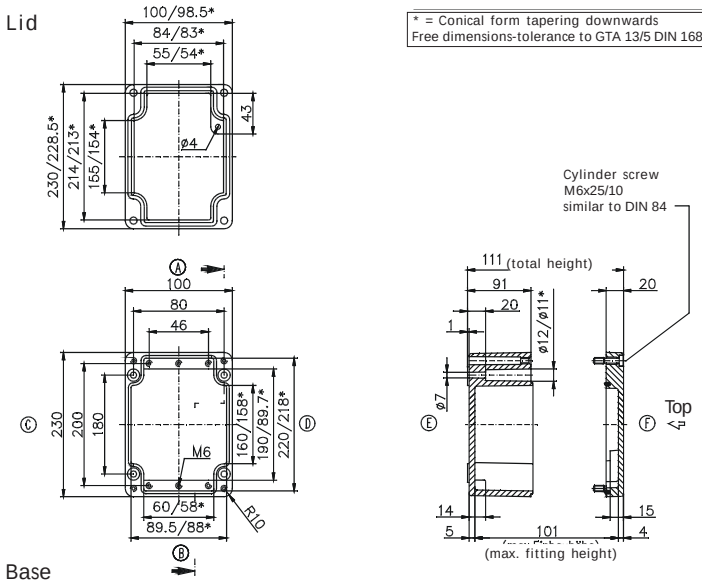


* = Conical form tapering downwards
Free dimensions-tolerance to GTA 13/5 DIN 1688

Type: **01.23 20 11** External dimensions: ***232 x 202 x 111 mm*** Weight: ***2880 g***

| DIN rail length in mm | max. fitting length in mm | Earthing rail clamp | Mounting plate (thickness in mm) | External mounting brackets | External hinge* set | EMC version | Internal hinge* set | SWB / SBG / SBGL Corr.protection | Allen lid screws | Silicone lid seal | Sealable lid screws in steel | Turn bolt fastener on request | Quick lock |
|---|---|---|---|---|---|---|---|---|---|---|---|---|---|
| TS 35 | | | | | | | | | | | | | |
| 186 | 160 | 12 | 1.5 | • | • | • | • | • | • | • | • | • | • |

Maximum number of cable glands ***to DIN 50262****

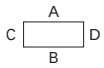


| M | Cor-ner dim. | Side A/B | Side C/D | PG | Cor-ner dim. | Side A/B | Side C/D |
|---|---|---|---|---|---|---|---|
| 12 | 17.25 | 45 | 45 | 7 | 17.25 | 45 | 45 |
| 16 | 25.30 | 22 | 18 | 9 | 21.85 | 28 | 28 |
| 20 | 27.60 | 18 | 17 | 11 | 25.30 | 20 | 18 |
| 25 | 37.95 | 8 | 8 | 13.5 | 27.60 | 18 | 17 |
| 32 | 48.30 | 6 | 5 | 16 | 31.05 | 15 | 12 |
| 40 | 60.95 | 3 | 3 | 21 | 37.95 | 8 | 8 |
| 50 | 69.00 | 2 | 2 | 29 | 48.30 | 5 | 4 |
| 63 | 74.75 | 2 | 2 | 36 | 60.95 | 3 | 3 |
| | | | | 42 | 69.00 | 2 | 2 |
| | | | | 48 | 74.75 | 2 | 2 |
| | | | | | | | |

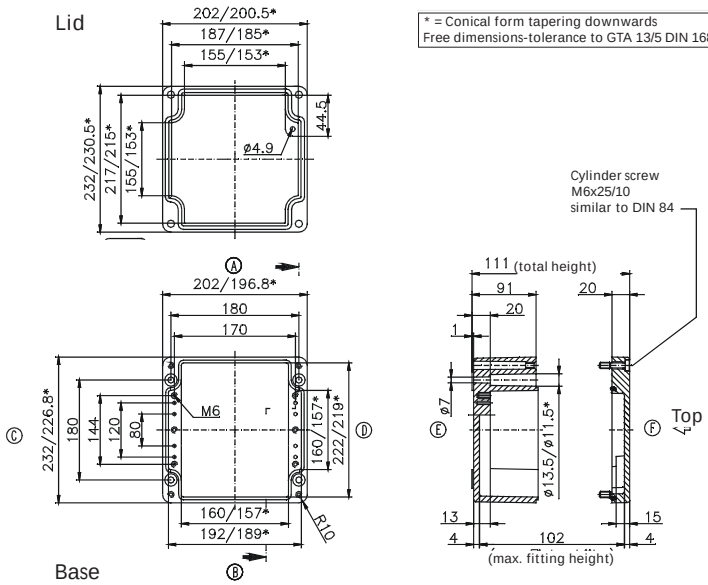


* = Conical form tapering downwards
Free dimensions-tolerance to GTA 13/5 DIN 1688

* Please quote mounting side

Type: ***01.23 20 18*** External dimensions: ***232 x 202 x 181 mm*** Weight: ***4600 g***

| DIN rail length in mm | max. fitting length in mm | Earthing rail clamp | Mounting plate (thickness in mm) | External mounting brackets | External hinge* set | EMC version | Internal hinge* set | SWB / SBG / SBGL Corr.protection | Allen lid screws | Silicone lid seal | Sealable lid screws in steel | Turn bolt fastener on request | Quick lock |
|---|---|---|---|---|---|---|---|---|---|---|---|---|---|
| TS 35 | | | | | | | | | | | | | |
| 186 | 160 | 12 | 1.5 | • | • | • | • | • | • | • | • | • | • |

Maximum number of cable glands ***to DIN 50262****

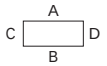


| *M* | Corner dim. | Side A/B | Side C/D | *PG* | Corner dim. | Side A/B | Side C/D |
|---|---|---|---|---|---|---|---|
| 12 | 17.25 | 90 | 81 | 7 | 17.25 | 90 | 81 |
| 16 | 25.30 | 42 | 36 | 9 | 21.85 | 56 | 49 |
| 20 | 27.60 | 33 | 33 | 11 | 25.30 | 42 | 36 |
| 25 | 37.95 | 18 | 16 | 13.5 | 27.60 | 33 | 33 |
| 32 | 48.30 | 10 | 9 | 16 | 31.05 | 25 | 25 |
| 40 | 60.95 | 6 | 6 | 21 | 37.95 | 16 | 16 |
| 50 | 69.00 | 5 | 5 | 29 | 48.30 | 10 | 9 |
| 63 | 74.75 | 4 | 4 | 36 | 60.95 | 6 | 5 |
| | | | | 42 | 69.00 | 5 | 4 |
| | | | | 48 | 74.75 | 4 | 4 |
| | | | | | | | |

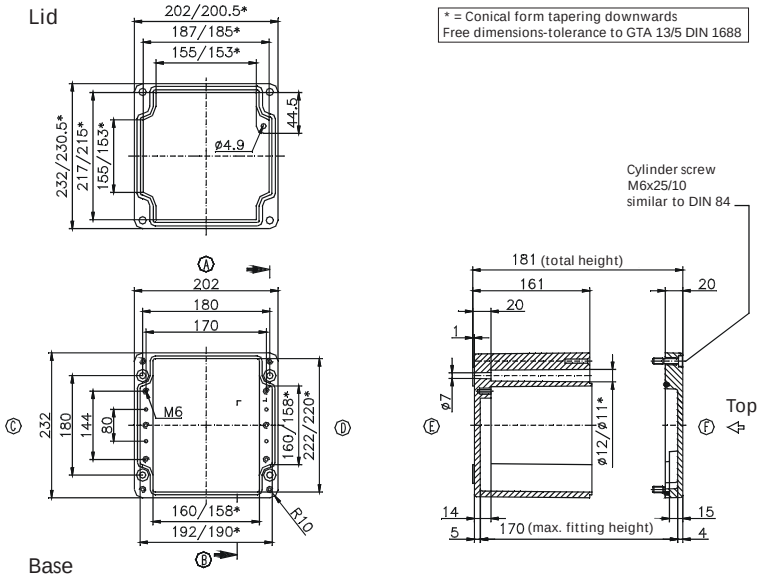


Type: ***01.23 28 11*** External dimensions: ***230 x 280 x 111 mm*** Weight: ***3460 g***

| DIN rail length in mm | max. fitting length in mm | Earthing rail clamp | Mounting plate (thickness in mm) | External mounting brackets | External hinge* set | EMC version | Internal hinge* set | SWB / SBG / SBGL Corr.protection | Allen lid screws | Silicone lid seal | Sealable lid screws in steel | Turn bolt fastener on request | Quick lock |
|---|---|---|---|---|---|---|---|---|---|---|---|---|---|
| TS 35 | | | | | | | | | | | | | |
| 264 | 240 | 16 | 1.5 | • | • | • | • | • | • | • | • | • | • |

Maximum number of cable glands ***to DIN 50262****

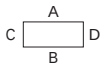


| *M* | Corner dim. | Side A/B | Side C/D | *PG* | Corner dim. | Side A/B | Side C/D |
|---|---|---|---|---|---|---|---|
| 12 | 17.25 | 70 | 45 | 7 | 17.25 | 68 | 45 |
| 16 | 25.30 | 32 | 18 | 9 | 21.85 | 44 | 28 |
| 20 | 27.60 | 24 | 17 | 11 | 25.30 | 32 | 18 |
| 25 | 37.95 | 12 | 8 | 13.5 | 27.60 | 24 | 17 |
| 32 | 48.30 | 9 | 5 | 16 | 31.05 | 21 | 12 |
| 40 | 60.95 | 4 | 3 | 21 | 37.95 | 12 | 8 |
| 50 | 69.00 | 3 | 2 | 29 | 48.30 | 9 | 4 |
| 63 | 74.75 | 3 | 2 | 36 | 60.95 | 4 | 3 |
| | | | | 42 | 69.00 | 3 | 2 |
| | | | | 48 | 74.75 | 3 | 2 |
| | | | | | | | |

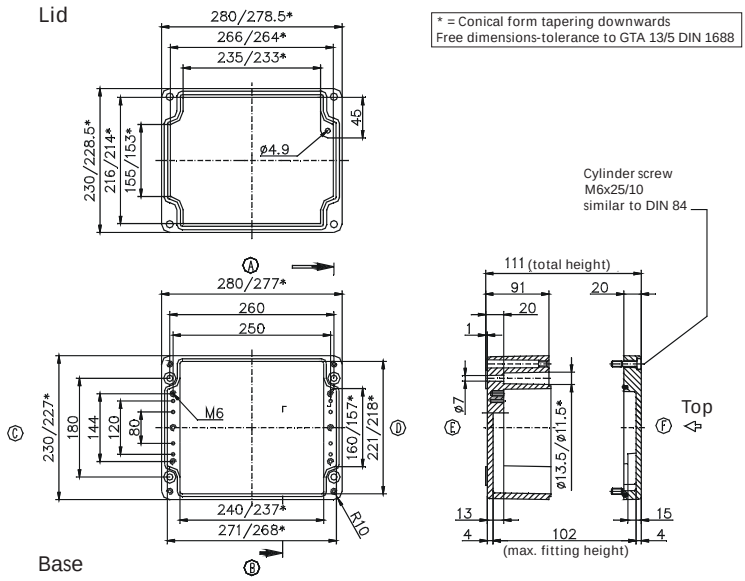


* Please quote mounting side

Type: **01.23 33 11** External dimensions: **230 x 330 x 111 mm** Weight: **3500 g**

| DIN rail length in mm | max. fitting length in mm | Earthing rail clamp | Mounting plate (thickness in mm) | External mounting brackets | External hinge* set | EMC version | Internal hinge* set | SWB / SBG / SBGL Corr.protection | Allen lid screws | Silicone lid seal | Sealable lid screws in steel | Turn bolt fastener on request | Quick lock |
|---|---|---|---|---|---|---|---|---|---|---|---|---|---|
| TS 35 | | | | | | | | | | | | | |
| 314 | 290 | 21 | 1.5 | • | • | • | • | • | • | • | • | • | • |

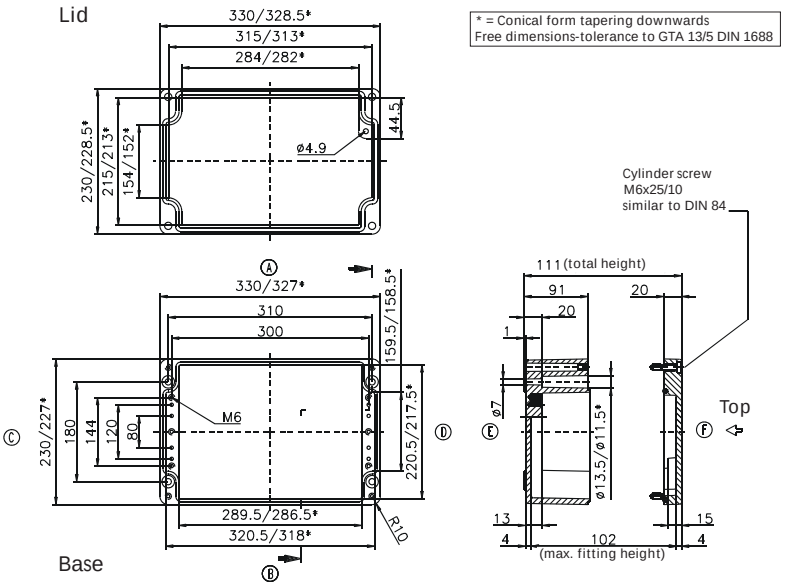


Maximum number of cable glands ***to DIN 50262****

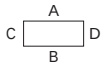


| M | Corner dim. | Side A/B | Side C/D | PG | Corner dim. | Side A/B | Side C/D |
|---|---|---|---|---|---|---|---|
| 12 | 17.25 | 84 | 45 | 7 | 17.25 | 81 | 45 |
| 16 | 25.30 | 42 | 18 | 9 | 21.85 | 52 | 28 |
| 20 | 27.60 | 30 | 17 | 11 | 25.30 | 38 | 18 |
| 25 | 37.95 | 15 | 8 | 13.5 | 27.60 | 30 | 17 |
| 32 | 48.30 | 11 | 5 | 16 | 31.05 | 27 | 12 |
| 40 | 60.95 | 5 | 3 | 21 | 37.95 | 15 | 8 |
| 50 | 69.00 | 4 | 2 | 29 | 48.30 | 11 | 4 |
| 63 | 74.75 | 4 | 2 | 36 | 60.95 | 5 | 3 |
| | | | | 42 | 69.00 | 4 | 2 |
| | | | | 48 | 74.75 | 4 | 2 |
| | | | | | | | |

Type: **01.23 33 18** External dimensions: **230 x 330 x 181 mm** Weight: **6400 g**

| DIN rail length in mm | max. fitting length in mm | Earthing rail clamp | Mounting plate (thickness in mm) | External mounting brackets | External hinge* set | EMC version | Internal hinge* set | SWB / SBG / SBGL Corr.protection | Allen lid screws | Silicone lid seal | Sealable lid screws in steel | Turn bolt fastener on request | Quick lock |
|---|---|---|---|---|---|---|---|---|---|---|---|---|---|
| TS 35 | | | | | | | | | | | | | |
| 314 | 290 | 21 | 1.5 | • | • | • | • | • | • | • | • | • | • |

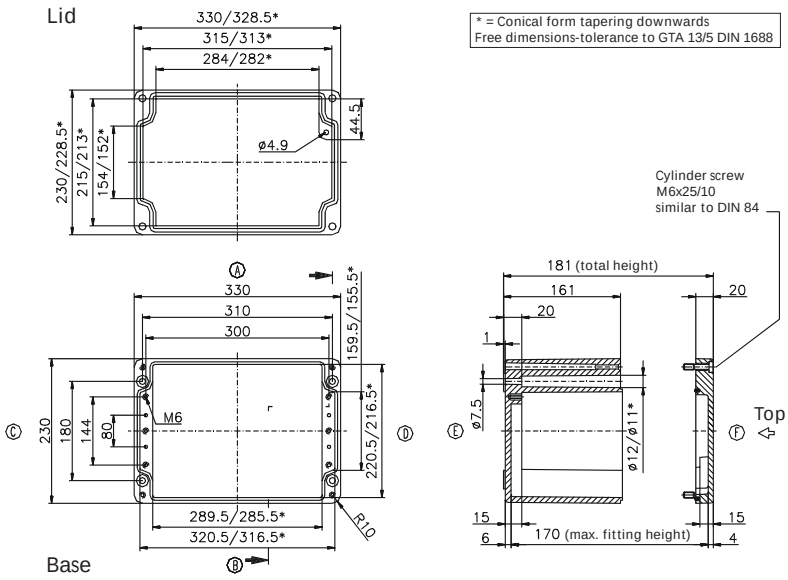


Maximum number of cable glands ***to DIN 50262****

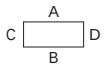


| M | Corner dim. | Side A/B | Side C/D | PG | Corner dim. | Side A/B | Side C/D |
|---|---|---|---|---|---|---|---|
| 12 | 17.25 | 165 | 81 | 7 | 17.25 | 144 | 81 |
| 16 | 25.30 | 77 | 36 | 9 | 21.85 | 104 | 49 |
| 20 | 27.60 | 60 | 33 | 11 | 25.30 | 77 | 36 |
| 25 | 37.95 | 30 | 16 | 13.5 | 27.60 | 60 | 33 |
| 32 | 48.30 | 18 | 9 | 16 | 31.05 | 45 | 25 |
| 40 | 60.95 | 11 | 6 | 21 | 37.95 | 30 | 16 |
| 50 | 69.00 | 8 | 5 | 29 | 48.30 | 18 | 9 |
| 63 | 74.75 | 8 | 4 | 36 | 60.95 | 11 | 5 |
| | | | | 42 | 69.00 | 8 | 4 |
| | | | | 48 | 74.75 | 8 | 4 |
| | | | | | | | |

* Please quote mounting side

Type: ***01.23 40 11*** External dimensions: ***230 x 400 x 111 mm*** Weight: ***4833 g***

| DIN rail length in mm | max. fitting length in mm | Earthing rail clamp | Mounting plate (thickness in mm) | External mounting brackets | External hinge* set | EMC version | Internal hinge* set | SWB / SBG / SBGL Corr.protection | Allen lid screws | Silicone lid seal | Sealable lid screws in steel | Turn bolt fastener on request | Quick lock |
|---|---|---|---|---|---|---|---|---|---|---|---|---|---|
| TS 35 | | | | | | | | | | | | | |
| 381 | 360 | 26 | 2 | • | • | • | • | • | • | • | • | • | • |

Maximum number of cable glands ***to DIN 50262****

A C D B

| *M* | Corner dim. | Side A/B | Side C/D | *PG* | Corner dim. | Side A/B | Side C/D |
|---|---|---|---|---|---|---|---|
| 12 | 17.25 | 103 | 45 | 7 | 17.25 | 103 | 45 |
| 16 | 25.30 | 50 | 18 | 9 | 21.85 | 64 | 28 |
| 20 | 27.60 | 39 | 17 | 11 | 25.30 | 46 | 18 |
| 25 | 37.95 | 20 | 8 | 13.5 | 27.60 | 39 | 17 |
| 32 | 48.30 | 14 | 5 | 16 | 31.05 | 33 | 12 |
| 40 | 60.95 | 6 | 3 | 21 | 37.95 | 18 | 8 |
| 50 | 69.00 | 5 | 2 | 29 | 48.30 | 13 | 4 |
| 63 | 74.75 | 5 | 2 | 36 | 60.95 | 6 | 3 |
| | | | | 42 | 69.00 | 5 | 2 |
| | | | | 48 | 74.75 | 5 | 2 |
| | | | | | | | |

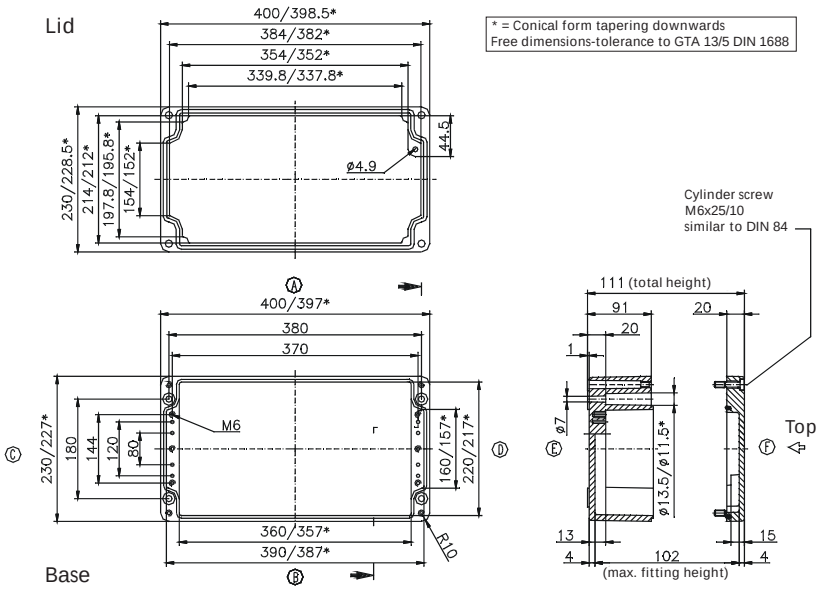


Type: ***01.23 40 23*** External dimensions: ***230 x 400 x 225 mm*** Weight: ***8300 g***

| DIN rail length in mm | max. fitting length in mm | Earthing rail clamp | Mounting plate (thickness in mm) | External mounting brackets | External hinge* set | EMC version | Internal hinge* set | SWB / SBG / SBGL Corr.protection | Allen lid screws | Silicone lid seal | Sealable lid screws in steel | Turn bolt fastener on request | Quick lock |
|---|---|---|---|---|---|---|---|---|---|---|---|---|---|
| TS 35 | | | | | | | | | | | | | |
| 381 | 360 | 26 | 2 | • | • | • | • | • | • | • | • | • | • |

Maximum number of cable glands ***to DIN 50262****

A C D B

| *M* | Corner dim. | Side A/B | Side C/D | *PG* | Corner dim. | Side A/B | Side C/D |
|---|---|---|---|---|---|---|---|
| 12 | 17.25 | 240 | 108 | 7 | 17.25 | 240 | 108 |
| 16 | 25.30 | 122 | 48 | 9 | 21.85 | 160 | 63 |
| 20 | 27.60 | 100 | 44 | 11 | 25.30 | 112 | 48 |
| 25 | 37.95 | 54 | 21 | 13.5 | 27.60 | 100 | 44 |
| 32 | 48.30 | 30 | 13 | 16 | 31.05 | 77 | 35 |
| 40 | 60.95 | 18 | 9 | 21 | 37.95 | 54 | 21 |
| 50 | 69.00 | 15 | 6 | 29 | 48.30 | 30 | 13 |
| 63 | 74.75 | 12 | 5 | 36 | 60.95 | 18 | 6 |
| | | | | 42 | 69.00 | 15 | 6 |
| | | | | 48 | 74.75 | 12 | 5 |
| | | | | | | | |

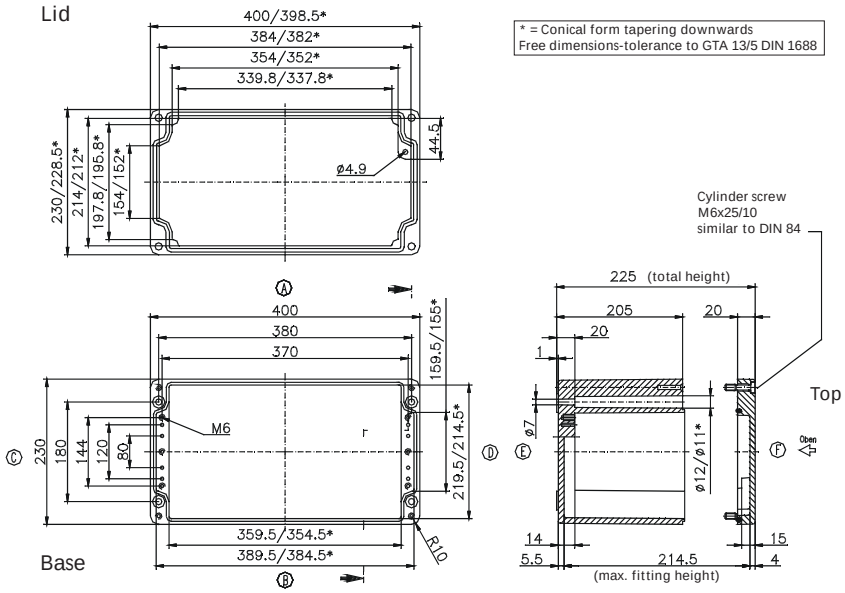


* Please quote mounting side

Type: ***01.23 60 11*** External dimensions: ***230 x 600 x 111 mm*** Weight: ***8700 g***

| DIN rail length in mm | max. fitting length in mm | Earthing rail clamp | Mounting plate (thickness in mm) | External mounting brackets | External hinge* set | EMC version | Internal hinge* set | SWB / SBG / SBGL Corr.protection | Allen lid screws | Silicone lid seal | Sealable lid screws in steel | Turn bolt fastener on request | Quick lock |
|---|---|---|---|---|---|---|---|---|---|---|---|---|---|
| TS 35 | | | | | | | | | | | | | |
| 581 | 560 | 41 | 2 | • | • | • | • | • | • | • | • | • | • |

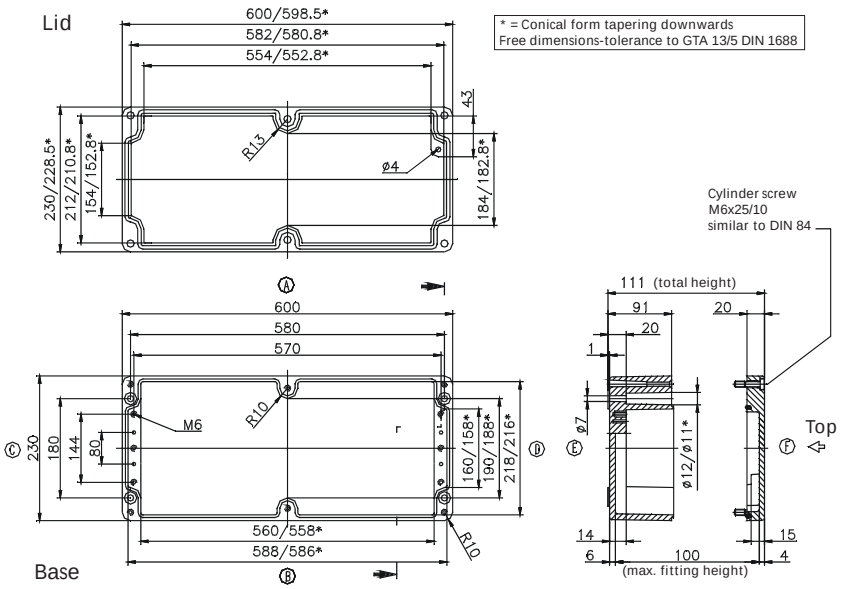


Maximum number of cable glands ***to DIN 50262****

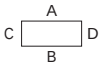


| M | Corner dim. | Side A/B | Side C/D | PG | Corner dim. | Side A/B | Side C/D |
|---|---|---|---|---|---|---|---|
| 12 | 17.25 | 150 | 43 | 7 | 17.25 | 150 | 43 |
| 16 | 25.30 | 72 | 18 | 9 | 21.85 | 96 | 28 |
| 20 | 27.60 | 54 | 17 | 11 | 25.30 | 68 | 18 |
| 25 | 37.95 | 28 | 8 | 13.5 | 27.60 | 54 | 15 |
| 32 | 48.30 | 20 | 4 | 16 | 31.05 | 28 | 12 |
| 40 | 60.95 | 10 | 3 | 21 | 37.95 | 28 | 8 |
| 50 | 69.00 | 8 | 2 | 29 | 48.30 | 20 | 4 |
| 63 | 74.75 | 6 | 2 | 36 | 60.95 | 10 | 2 |
| | | | | 42 | 69.00 | 8 | 2 |
| | | | | 48 | 74.75 | 6 | 2 |
| | | | | | | | |

Type: ***01.31 40 11*** External dimensions: ***313 x 404 x 111 mm*** Weight: ***6400 g***

| DIN rail length in mm | max. fitting length in mm | Earthing rail clamp | Mounting plate (thickness in mm) | External mounting brackets | External hinge* set | EMC version | Internal hinge* set | SWB / SBG / SBGL Corr.protection | Allen lid screws | Silicone lid seal | Sealable lid screws in steel | Turn bolt fastener on request | Quick lock |
|---|---|---|---|---|---|---|---|---|---|---|---|---|---|
| TS 35 | | | | | | | | | | | | | |
| 381 | 360 | 26 | 2 | • | • | • | • | • | • | • | • | • | • |

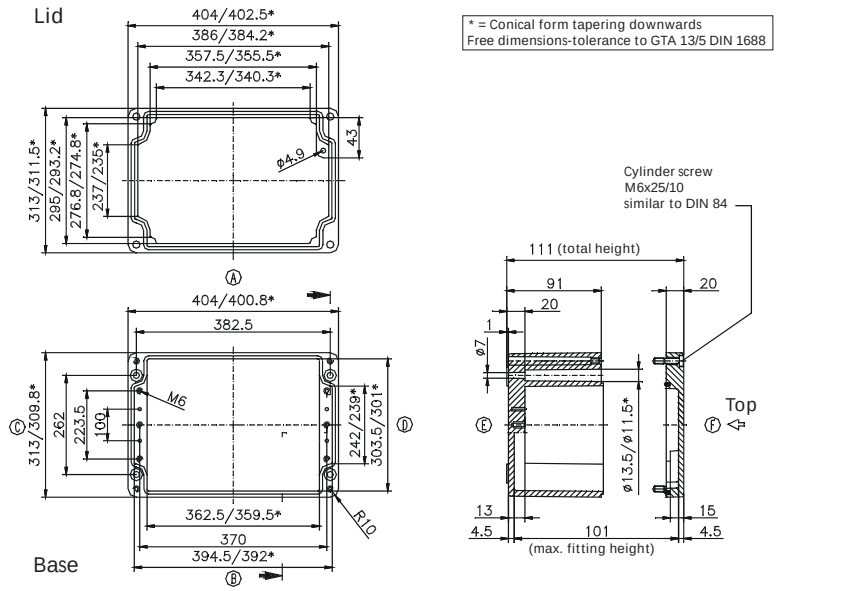


Maximum number of cable glands ***to DIN 50262****

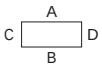


| M | Corner dim. | Side A/B | Side C/D | PG | Corner dim. | Side A/B | Side C/D |
|---|---|---|---|---|---|---|---|
| 12 | 17.25 | 105 | 68 | 7 | 17.25 | 103 | 68 |
| 16 | 25.30 | 50 | 28 | 9 | 21.85 | 64 | 42 |
| 20 | 27.60 | 39 | 26 | 11 | 25.30 | 46 | 27 |
| 25 | 37.95 | 20 | 12 | 13.5 | 27.60 | 39 | 24 |
| 32 | 48.30 | 14 | 7 | 16 | 31.05 | 33 | 18 |
| 40 | 60.95 | 6 | 4 | 21 | 37.95 | 18 | 12 |
| 50 | 69.00 | 5 | 3 | 29 | 48.30 | 13 | 7 |
| 63 | 74.75 | 5 | 3 | 36 | 60.95 | 6 | 4 |
| | | | | 42 | 69.00 | 5 | 3 |
| | | | | 48 | 74.75 | 5 | 3 |
| | | | | | | | |

* Please quote mounting side

Type: ***01.31 40 14*** External dimensions: ***312 x 403 x 141 mm*** Weight: ***9500 g***

| DIN rail length in mm | max. fitting length in mm | Earthing rail clamp | Mounting plate (thickness in mm) | External mounting brackets | External hinge* set | EMC version | Internal hinge* set | SWB / SBG / SBGL Corr.protection | Allen lid screws | Silicone lid seal | Sealable lid screws in steel | Turn bolt fastener on request | Quick lock |
|---|---|---|---|---|---|---|---|---|---|---|---|---|---|
| TS 35 | | | | | | | | | | | | | |
| 381 | 360 | 26 | 2 | • | • | • | • | • | • | • | • | • | • |

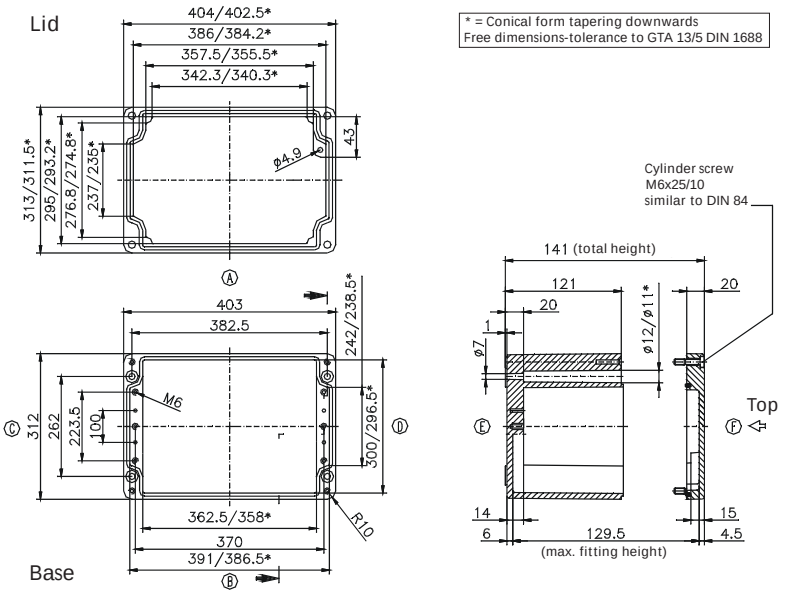


Maximum number of cable glands ***to DIN 50262****

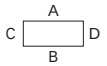


| ***M*** | Corner dim. | Side A/B | Side C/D | ***PG*** | Corner dim. | Side A/B | Side C/D |
|---|---|---|---|---|---|---|---|
| 12 | 17.25 | 147 | 95 | 7 | 17.25 | 147 | 95 |
| 16 | 25.30 | 70 | 43 | 9 | 21.85 | 96 | 55 |
| 20 | 27.60 | 55 | 32 | 11 | 25.30 | 70 | 40 |
| 25 | 37.95 | 28 | 18 | 13.5 | 27.60 | 55 | 32 |
| 32 | 48.30 | 17 | 10 | 16 | 31.05 | 44 | 28 |
| 40 | 60.95 | 12 | 7 | 21 | 37.95 | 27 | 18 |
| 50 | 69.00 | 7 | 4 | 29 | 48.30 | 17 | 10 |
| 63 | 74.75 | 6 | 3 | 36 | 60.95 | 12 | 7 |
| | | | | 42 | 69,00 | 7 | 4 |
| | | | | 48 | 74,75 | 6 | 3 |
| | | | | | | | |

Type: ***01.31 40 18*** External dimensions: ***313 x 404 x 181 mm*** Weight: ***9780 g***

| DIN rail length in mm | max. fitting length in mm | Earthing rail clamp | Mounting plate (thickness in mm) | External mounting brackets | External hinge* set | EMC version | Internal hinge* set | SWB / SBG / SBGL Corr.protection | Allen lid screws | Silicone lid seal | Sealable lid screws in steel | Turn bolt fastener on request | Quick lock |
|---|---|---|---|---|---|---|---|---|---|---|---|---|---|
| TS 35 | | | | | | | | | | | | | |
| 381 | 360 | 26 | 2 | • | • | • | • | • | • | • | • | • | • |

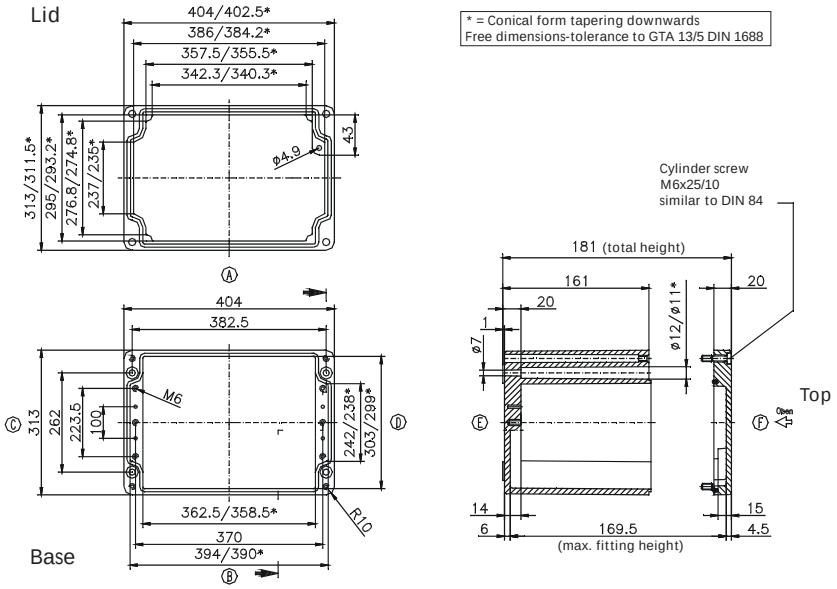


Maximum number of cable glands ***to DIN 50262****

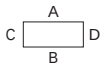


| ***M*** | Corner dim. | Side A/B | Side C/D | ***PG*** | Corner dim. | Side A/B | Side C/D |
|---|---|---|---|---|---|---|---|
| 12 | 17.25 | 205 | 122 | 7 | 17.25 | 205 | 122 |
| 16 | 25.30 | 98 | 54 | 9 | 21.85 | 128 | 77 |
| 20 | 27.60 | 78 | 51 | 11 | 25.30 | 98 | 54 |
| 25 | 37.95 | 40 | 24 | 13.5 | 27.60 | 75 | 48 |
| 32 | 48.30 | 22 | 15 | 16 | 31.05 | 60 | 38 |
| 40 | 60.95 | 15 | 9 | 21 | 37.95 | 38 | 24 |
| 50 | 69.00 | 11 | 6 | 29 | 48.30 | 22 | 15 |
| 63 | 74.75 | 8 | 6 | 36 | 60.95 | 14 | 8 |
| | | | | 42 | 69.00 | 10 | 6 |
| | | | | 48 | 74.75 | 10 | 6 |
| | | | | | | | |

* Please quote mounting side

Type: **01.31 40 23** External dimensions: ***313 x 404 x 227 mm*** Weight: ***11000 g***

| DIN rail length in mm | max. fitting length in mm | Earthing rail clamp | Mounting plate (thickness in mm) | External mounting brackets | External hinge* set | EMC version | Internal hinge* set | SWB / SBG / SBGL Corr.protection | Allen lid screws | Silicone lid seal | Sealable lid screws in steel | Turn bolt fastener on request | Quick lock |
|---|---|---|---|---|---|---|---|---|---|---|---|---|---|
| TS 35 | | | | | | | | | | | | | |
| 381 | 360 | 26 | 2 | • | • | • | • | • | • | • | • | • | • |

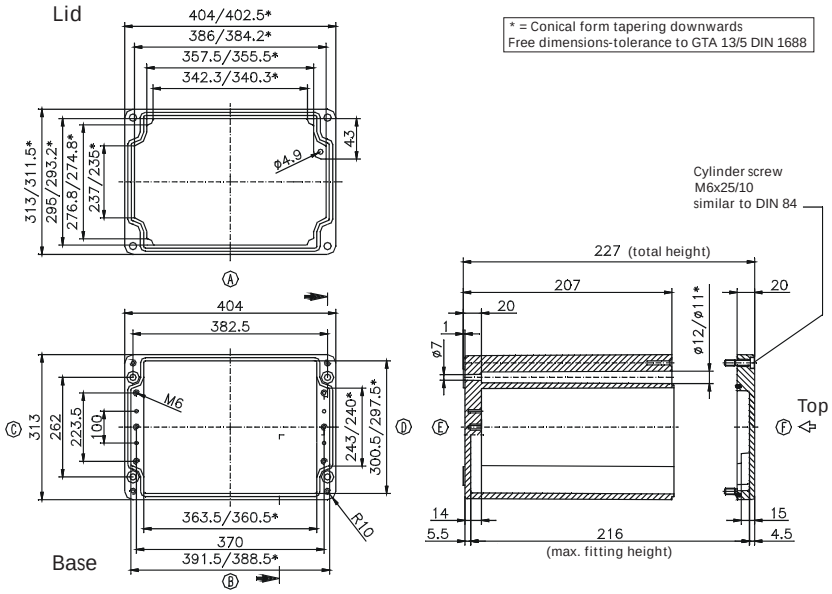


Maximum number of cable glands ***to DIN 50262****

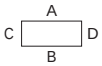


| ***M*** | Corner dim. | Side A/B | Side C/D | ***PG*** | Corner dim. | Side A/B | Side C/D |
|---|---|---|---|---|---|---|---|
| 12 | 17.25 | 246 | 162 | 7 | 17.25 | 246 | 162 |
| 16 | 25.30 | 126 | 72 | 9 | 21.85 | 160 | 99 |
| 20 | 27.60 | 100 | 68 | 11 | 25.30 | 112 | 72 |
| 25 | 37.95 | 54 | 33 | 13.5 | 27.60 | 100 | 64 |
| 32 | 48.30 | 30 | 20 | 16 | 31.05 | 77 | 53 |
| 40 | 60.95 | 18 | 12 | 21 | 37.95 | 54 | 33 |
| 50 | 69.00 | 15 | 9 | 29 | 48.30 | 30 | 20 |
| 63 | 74.75 | 12 | 8 | 36 | 60.95 | 18 | 12 |
| | | | | 42 | 69.00 | 15 | 9 |
| | | | | 48 | 74.75 | 14 | 8 |
| | | | | | | | |

Type: **01.31 60 11** External dimensions: ***310 x 600 x 111 mm*** Weight: ***10160 g***

| DIN rail length in mm | max. fitting length in mm | Earthing rail clamp | Mounting plate (thickness in mm) | External mounting brackets | External hinge* set | EMC version | Internal hinge* set | SWB / SBG / SBGL Corr.protection | Allen lid screws | Silicone lid seal | Sealable lid screws in steel | Turn bolt fastener on request | Quick lock |
|---|---|---|---|---|---|---|---|---|---|---|---|---|---|
| TS 35 | | | | | | | | | | | | | |
| 581 | 560 | 41 | 2 | • | • | • | • | • | • | • | • | • | • |

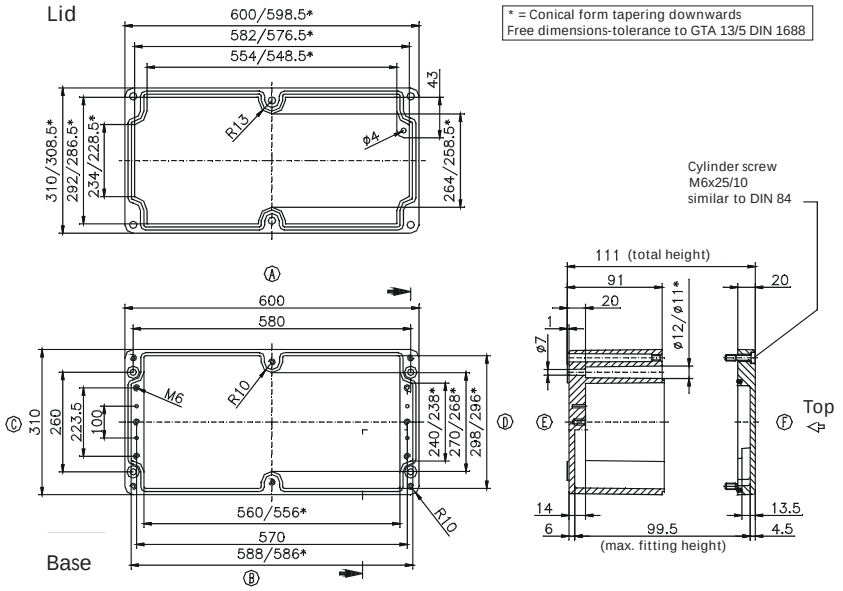


Maximum number of cable glands ***to DIN 50262****

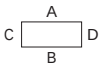


| ***M*** | Corner dim. | Side A/B | Side C/D | ***PG*** | Corner dim. | Side A/B | Side C/D |
|---|---|---|---|---|---|---|---|
| 12 | 17.25 | 150 | 68 | 7 | 17.25 | 150 | 68 |
| 16 | 25.30 | 76 | 28 | 9 | 21.85 | 96 | 42 |
| 20 | 27.60 | 60 | 24 | 11 | 25.30 | 72 | 27 |
| 25 | 37.95 | 30 | 12 | 13.5 | 27.60 | 60 | 24 |
| 32 | 48.30 | 20 | 7 | 16 | 31.05 | 48 | 18 |
| 40 | 60.95 | 10 | 4 | 21 | 37.95 | 28 | 12 |
| 50 | 69.00 | 8 | 3 | 29 | 48.30 | 20 | 6 |
| 63 | 74.75 | 6 | 3 | 36 | 60.95 | 10 | 4 |
| | | | | 42 | 69.00 | 8 | 3 |
| | | | | 48 | 74.75 | 6 | 3 |
| | | | | | | | |

* Please quote mounting side

Type: ***01.31 60 18*** External dimensions: ***310 x 600 x 181 mm*** Weight: ***12560 g***

| DIN rail length in mm | max. fitting length in mm | Earthing rail clamp | Mounting plate (thickness in mm) | External mounting brackets | External hinge* set | EMC version | Internal hinge* set | SWB / SBG / SBGL Corr.protection | Allen lid screws | Silicone lid seal | Sealable lid screws in steel | Turn bolt fastener on request | Quick lock |
|---|---|---|---|---|---|---|---|---|---|---|---|---|---|
| TS 35 | | | | | | | | | | | | | |
| 581 | 560 | 41 | 2 | • | • | • | • | • | • | • | • | • | • |

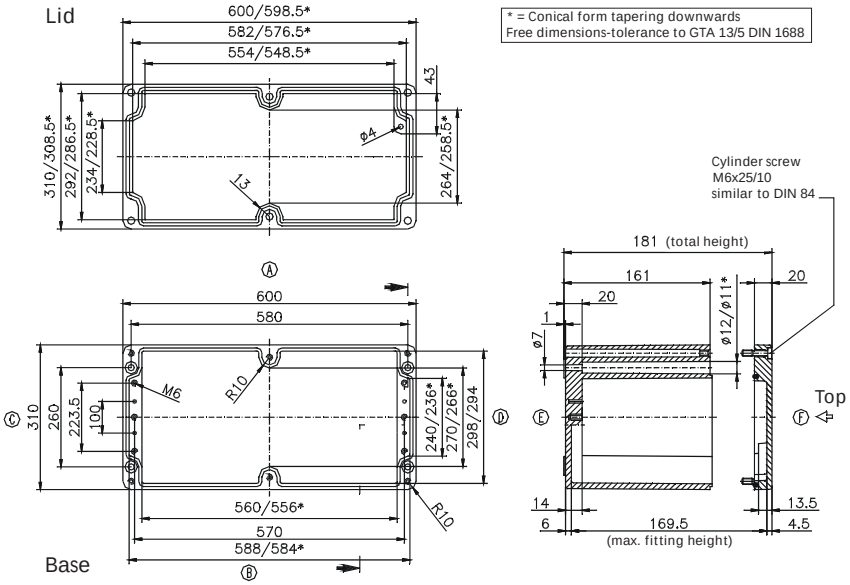


Maximum number of cable glands ***to DIN 50262****

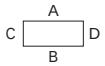


| ***M*** | Corner dim. | Side A/B | Side C/D | ***PG*** | Corner dim. | Side A/B | Side C/D |
|---|---|---|---|---|---|---|---|
| 12 | 17.25 | 150 | 68 | 7 | 17.25 | 150 | 68 |
| 16 | 25.30 | 76 | 28 | 9 | 21.85 | 96 | 42 |
| 20 | 27.60 | 60 | 24 | 11 | 25.30 | 72 | 27 |
| 25 | 37.95 | 30 | 12 | 13.5 | 27.60 | 60 | 24 |
| 32 | 48.30 | 20 | 7 | 16 | 31.05 | 48 | 18 |
| 40 | 60.95 | 10 | 4 | 21 | 37.95 | 28 | 12 |
| 50 | 69.00 | 8 | 3 | 29 | 48.30 | 20 | 6 |
| 63 | 74.75 | 6 | 3 | 36 | 60.95 | 10 | 4 |
| | | | | 42 | 69.00 | 8 | 3 |
| | | | | 48 | 74.75 | 6 | 3 |
| | | | | | | | |

* Please quote mounting side

Type: ***01.60 60 20*** External dimensions: ***600 x 600 x 202 mm*** Weight: ***26200 g***

| DIN rail length in mm | max. fitting length in mm | Earthing rail clamp | Mounting plate (thickness in mm) | External mounting brackets | External hinge* set | EMC version | Internal hinge* set | SWB / SBG / SBGL Corr.protection | Allen lid screws | Silicone lid seal | Sealable lid screws in steel | Turn bolt fastener on request | Quick lock |
|---|---|---|---|---|---|---|---|---|---|---|---|---|---|
| TS 35 | | | | | | | | | | | | | |
| 575 | 552 | | 2.5 | | • | | | • | | • | | | |

Maximum number of cable glands to ***DIN 50262****

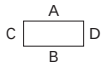


| ***M*** | Corner dim. | Side A/B | Side C/D | ***PG*** | Corner dim. | Side A/B | Side C/D |
|---|---|---|---|---|---|---|---|
| 12 | 17.25 | 270 | 270 | 7 | 17.25 | 270 | 270 |
| 16 | 25.30 | 140 | 140 | 9 | 21.85 | 184 | 184 |
| 20 | 27.60 | 108 | 108 | 11 | 25.30 | 134 | 134 |
| 25 | 37.95 | 56 | 56 | 13.5 | 27.60 | 108 | 108 |
| 32 | 48.30 | 32 | 32 | 16 | 31.05 | 84 | 84 |
| 40 | 60.95 | 22 | 22 | 21 | 37.95 | 56 | 56 |
| 50 | 69.00 | 16 | 16 | 29 | 48.30 | 32 | 32 |
| 63 | 74.75 | 12 | 12 | 36 | 60.95 | 18 | 18 |
| | | | | 42 | 69.00 | 12 | 12 |
| | | | | 48 | 74.75 | 12 | 12 |
| | | | | | | | |

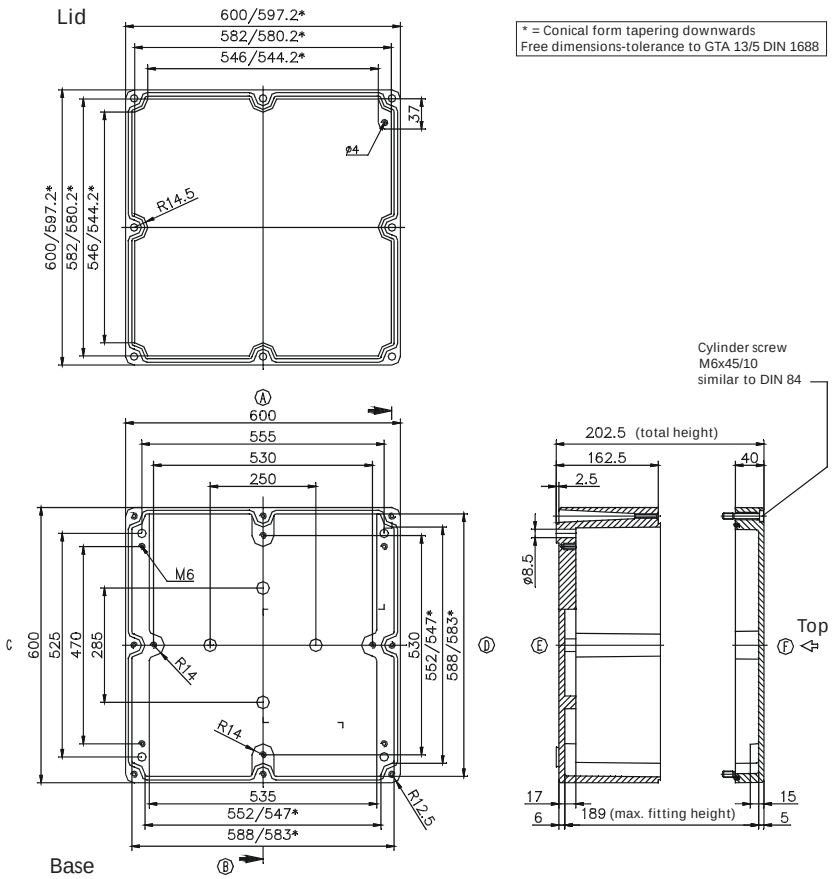


* Please quote mounting side