Description	Material	Finish
Body	Brass	Nickel
Pin	Brass	Gold
Insulation	PTFE	N/A
Washer	PH Bronze	Nickel
Gasket	SI Rubber	Rubber

REVISIONS			
REV	DESCRIPTION	DATE	APPV
B	Added new title block	11-JUL-12	SAH

SIDE VIEW

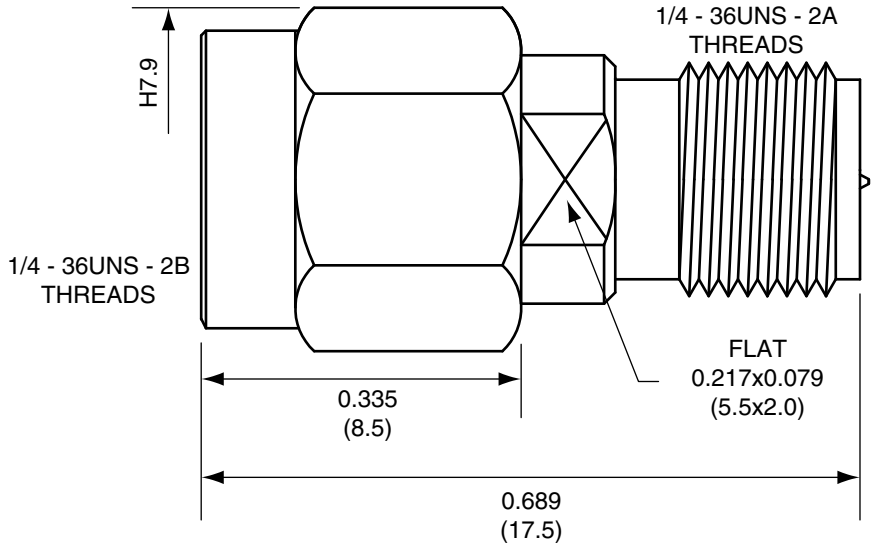

NOTES: (UNLESS OTHERWISE SPECIFIED)

1. ALL DIMENSIONS ARE IN INCHES [mm].
2. DIMENSIONS APPLY AFTER FINISHING.
3. MANUFACTURE TO BE COMPLIANT WITH EU RoHS DIRECTIVE.
4. SAFETY BREAK ALL SHARP CORNERS AND EDGES .02 MAXIMUM.

WARNING: THIS DRAWING CONTAINS PROPRIETARY INFORMATION THAT IS THE SOLE PROPERTY OF LINX TECHNOLOGIES, AND SHALL BE TREATED AS SUCH. NO DISCLOSURE OR REPRODUCTION OF THIS DOCUMENT IS PERMITTED, IN WHOLE OR IN PART, WITHOUT THE EXPRESS WRITTEN PERMISSION OF LINX TECHNOLOGIES OR ITS DESIGNATED AGENTS.

Linx
159 ORT LANE
MERLIN, OR 97532

TITLE: SMA MALE TO RP-SMA FEMALE ADAPTOR

MATERIAL:

FINISH:

TOLERANCES:
.020 [0.50]-.200 [5.00]= ±.008 [0.20]
.200 [5.00]-1.200 [30.00]= ±.016 [0.40]
1.20 [30.0]-4.75 [120.0]= ±.024 [0.60]
4.75 [120.0]-12.40 [315.0]= ±.040 [1.0]

PROJECTION:

ANGLES: ±1°

DRAWN: B.MURPHY	DT: 11-JUL-12	SIZE A	DWG. NO. ADP-SMAM-RPSF	REV B
ENGR: S.HOGAN	DT: 11-JUL-12	SCALE: 2:1	DO NOT SCALE DRAWING	SHEET 1 OF 1

LDCFDLT_A

Mouser Electronics

Authorized Distributor

Click to View Pricing, Inventory, Delivery & Lifecycle Information:

Linx Technologies:
ADP-SMAM-RPSF