REV.	DESCRIPTION	DATE	APP.
00	NEW DWG.	9/29/06	S.G.

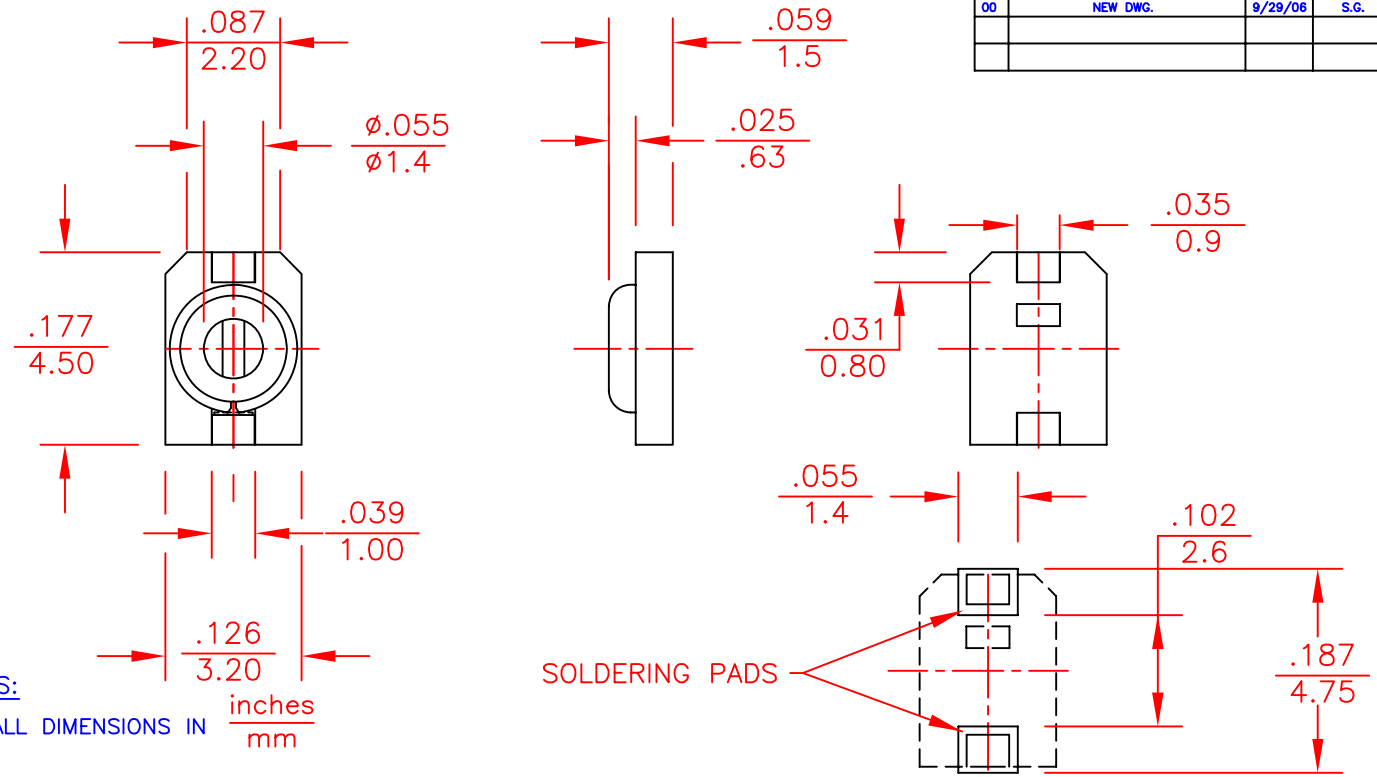

NOTES:

1. ALL DIMENSIONS IN inches / mm

SUGGESTED SURFACE MOUNT LAYOUT

RECOMMENDED THICKNESS OF SOLDER .0006 / 0.15

SPECS \ PART NUMBER / COLOR CODE	SGC3S030 BLACK	SGC3S060 BLUE	SGC3S100 IVORY	SGC3S200 PINK	SGC3S300 GREEN
Capacitance (pF min.) less than	1.2	2.2	3.0	5.5	8.0
Capacitance (pFmax.) more than	3.0	6.0	10.0	20,0	30.0
Temperature coefficient (ppm/°C)	N470±60	N470±60	N1000±250	0±500	−750±500
Q (at1MHz and Cmax) over	300	500	500	500	500
Insulation resistance	10^4 megohms				
Torque	0.14 to 1.0 oz−in / 10 to 72 gf−cm				
DC Working voltage	500 VDC	500 VDC	500VDC	500VDC	500 VDC
DC Withstanding voltage	1000 VDC	1000VDC	1000 VDC	1000 VDC	1000VDC
Operating temperature °C	−40 to +85				
Self resonant frequency @ Cmax	2.0 GHz	1.5 GHz	1.3 GHz	0.8GHz	0.6 GHz

TOLERANCES: (EXCEPT AS NOTED)	SPRAGUE GOODMAN ELECTRONICS INC. 1700 SHAMES DRIVE WESTBURY, NY 11590		
DECIMAL: xxx ±.016 in ±.41 mm	MATERIAL:	SCALE 8:1	DRAWN BY: D.DITLYA APPROVED: S.GRINBERG
FRACTIONAL: 1/64	TITLE: OUTLINE DWG SGC3S PRODUCT LINE		
ANGULAR: 1/64	DATE: 9/29/06	DRAWING NUMBER SGC3S	Rev. 00