Clifa®
press-in nut/stud ...

Clifa®-press-in nuts and Clifa® studs are threaded inserts made of steel with a specially formed shank or head.

Clifa®-press-in nuts and Clifa® studs can also be supplied in rust-proof material, and the nuts additionally in light alloy.

Clifa®-threaded inserts are pressed into moulded components with prepunched receiving holes. During this process, the material flows out of the area of the hole wall into the gear ring / the annular grooves of the Clifa® threaded inserts. A permanent connection is formed.

Several Clifa® inserts can be installed in a single work process. The fastening screw is always screwed in from the opposite side.

Fields of application

Clifa® press-in nuts and Clifa® studs are used to fasten all different types of appliance components, as spacers pins and bushings for plastics, e.g. circuit boards etc.

Product features

- Clifa® is torque-proof, capable of withstanding high loads.
- It has minimal outside dimensions for space and weight-saving
- The thread is wear-resistant, clean and true to gauge
- Mounting in drilled, punched or lasered receiving holes
- Do not countersink drill holes in the component
- Can be used in surface-treated, galvanized or unweldable materials
- Clifa® is not pressed out during the screwing process.
- The component material must be softer than the Clifa® element

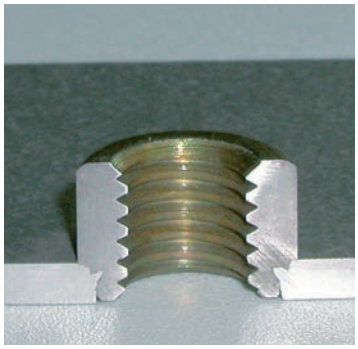

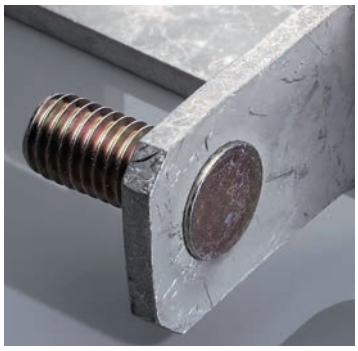

Specifications

Works Standard sheets Clifa®
Pages 11 to 20

High-performance installation equip ment for short cycle times in largescale production on request.

Kerb Konus

Clifa® installation ...

Installation

The receiving hole is punched, lasered or drilled **but not deburred or countersunk.**

With punched holes, Clifa® is pressed in from the punching burr side. The press-in process takes place on a plane parallel basis using a customary press with adjustable pressure level, until the surface of the shoulder in the Clifa® pressin nut comes to rest flat against the surface of the sheet metal.

In the case of the Clifa®-SP/SPD/SPS and SR stud, the head must be fully pressed in and come to rest flush with the surface of the sheet metal.

Pressure which is too high or applied only on one side as well as inclined support surfaces must be avoided wherever possible.

Examples for mounting

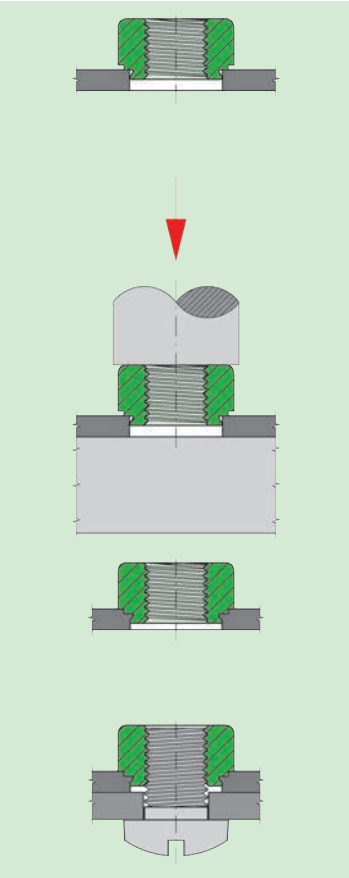

Press-in nut Clifa® Fig. 6

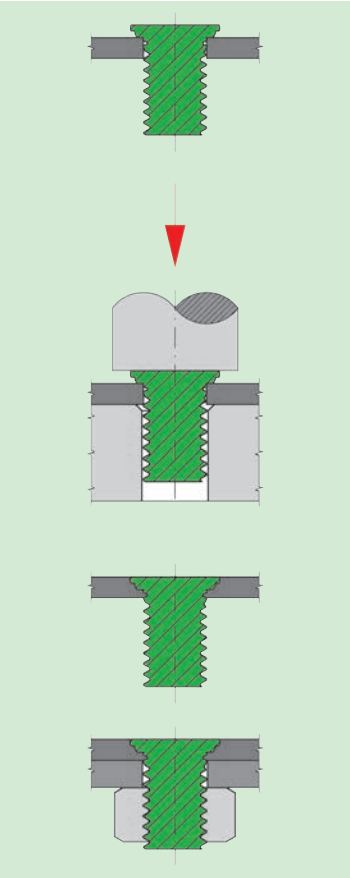

Press-in stud Clifa®-SP Fig. 7

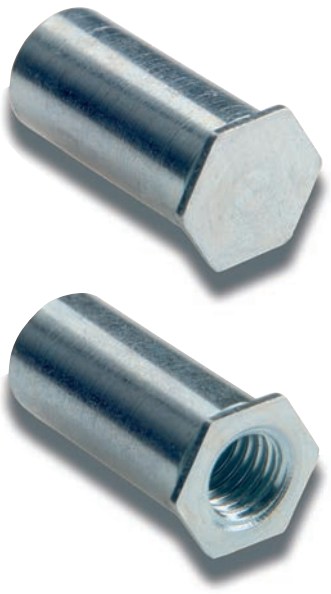

Special request

short length	
standoff bushings for metals	
standoff bushings for plastics threaded press-in stud	
Flush surface on the press-in side of the nut element (/- thread closed on one side)	
for thin sheet metals 1,0 mm	
threaded press-in stud for high force	
threaded press-in stud for epoxy resin moulding materials	
threaded press-in stud for lower press-in force	

We recommend

Clifa®-M	(Works Standard 500 0 to 503 0)
Clifa®-AM	(Works Standard 503 8 to 525 8)
Clifa®-AL	(Works Standard 503 6 to 525 6)
Clifa®-ABO/-ABG	(Works Standard 570 0 to 571 0)
Clifa®-SPD	(Works Standard 5.. 2)
Clifa®-SA	(Works Standard 515 4 to 534 4)
Clifa®-SL	(Works Standard 506 7 to 518 7)
Clifa®-SAD	(Works Standard 515 9 to 534 9)

Press-in stud
for metal

Clifa®-SP/-SR/-SPD
Works Standard
506 to 534

Application

These Clifa®-press-in studs are particularly suited for creating torque-resistant screw connections capable of withstanding high loads in thin-walled moulded parts made of

- Steel
- Stainless steel
- Brass
- Copper
- Light alloy etc.

The stud is anchored in the component by the serrations as a result of the press-in process.

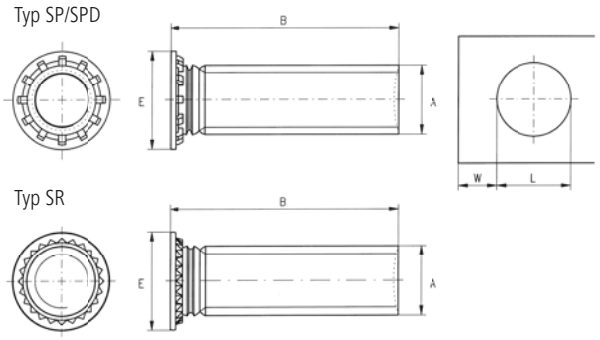

Dimensions in mm

Article number first group of digits (selection series)	Length ± 0,2 B*)	Available M2,5	M3	M4	M5	M6	M8
506	6,0	X	X	X	X		
508	8,0	X	X	X	X	X	
510	10,0	X	X	X	X	X	X
512	12,0	X	X	X	X	X	X
515	15,0	X	X	X	X	X	X
518	18,0	X	X	X	X	X	X
520	20,0	X	X	X	X	X	X
525	25,0	X	X	X	X	X	X
. . .	. . .			. . .	. . .	. . .	. . .
534	34,0			X	X	X	X

Article no. second and third group of digits	Thread A	for sheet metal thickness ≥	Head diameter E SP/SPD	SR	Hole diameter +0,05 L	Minimum spacing ≥ W	Tightening torque of the nut ≤ Nm
... .00 025 ...	M 2,5	1,0	4,0	–	2,5	3,5	0,7
... .00 030 ...	M 3	1,0	4,6	4,3	3,0	4,0	1,5
... .00 040 ...	M 4	1,0	5,9	5,7	4,0	5,0	2,9
... .00 050 ...	M 5	1,0	6,5	6,5	5,0	5,0	6,0
... .00 060 ...	M 6	1,5	8,5	8,5	6,0	5,0	10,0
... .00 080 ...	M 8	1,5	10,0	11,0	8,0	6,0	20,0

Other materials, types and finishes on request.

Example for finding the article number
Self-clinching press-in stud Clifa®-SP, M3 tempered, zinc plated and blue passivated steel, 10 mm long, with serrations at the head for sheet metal thickness 1,2 mm: Clifa®-SP 510 000 030.110

Standard	**Coarse serration at the head Clifa®-SP**	**Article no.**	**5.. 000 ... ...**
For lower press in force	**Fine serration at the head Clifa®-SR**	**Article no.**	**5.. 100 ... ...**
For sheet metal ≤ 1,0 mm	**Thin-metal press-in stud Clifa®-SPD**	**Article no.**	**5.. 200 ... ...**

Materials
Steel tempered, zinc plated, blue passivated ** — Article no. (**fourth** group of digits) 110
Steel tempered, zinc-nickel plated, transparent passivated ** — Article no. (**fourth** group of digits) 143
Stainless steel — Article no. (**fourth** group of digits) 500

Tolerances
ISO 2768-m

Thread
Stud thread A: as per ISO 6g, imperial thread available in all customary sizes.

***) Length B** — **available up to 60 mm**
****) Material** — **Press-in stud in tempered steel, available in customary strength classes.**

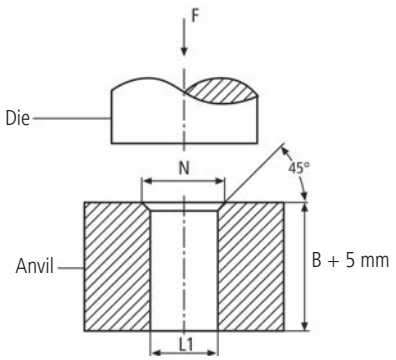

Dimensions in mm

Anvil for Clifa®	Hole +0,1 L1	Countersink for serrations N+0,1	Press-in force SP/SR/SPD/SPS kN
M 2,5	2,6	3,4	8,9 to 12
M 3	3,1	4,0	10,5 to 19
M 4	4,1	5,2	16 to 25
M 5 / Ø 5,0	5,1	6,4	29 to 35
M 6	6,1	7,6	30 to 50
M 8	8,1	10,2	30 to 60

The press-in force F is dependent on the Clifa® dimension, the material and the thickness of the shaped component and also the type of serration at the head. The Clifa® head must be fully embedded and must come to rest flush with the surface of the sheet metal. Excessive force must be avoided. The hole diameter of the part to be screwed on ≈ A+0,6 mm.

Kerb-Konus-Vertriebs-GmbH • P.O. Box 1663 • 92206 Amberg • Phone +49 9621 679-0 • Fax +49 9621 679444

Fasteners for special applications ...

Press-in stud
with special part-end

Rivet bushing with
Double riveting contour

Press-in nut with
Three cross-holes

Press-in stud
with segmented head

Rivet bushing with fine
thread on outer diameter

Rivet bushing with
special sealing contour

Bolt with t-groove for
fixing/locking of screw-in
elements

Press-in nut with
hexagonal head

Press-in nut with three
knurls on outer diameter