POSITIONS/ CONTACTS	A		B	
	INCH±.008	MM±0.20	INCH±.012	MM±0.30
02/02	0.050	1.27	0.116	2.94
03/03	0.100	2.54	0.166	4.21
04/04	0.150	3.81	0.216	5.48
05/05	0.200	5.08	0.266	6.75
06/06	0.250	6.35	0.316	8.02
07/07	0.300	7.62	0.366	9.29
08/08	0.350	8.89	0.416	10.56
09/09	0.400	10.16	0.466	11.83
10/10	0.450	11.43	0.516	13.10
11/11	0.500	12.70	0.566	14.37
12/12	0.550	13.97	0.616	15.64
13/13	0.600	15.24	0.666	16.91
14/14	0.650	16.51	0.716	18.18
15/15	0.700	17.78	0.766	19.45
16/16	0.750	19.05	0.816	20.72
17/17	0.800	20.32	0.866	21.99
18/18	0.850	21.59	0.916	23.26
19/19	0.900	22.86	0.966	24.53
20/20	0.950	24.13	1.016	25.80
21/21	1.000	25.40	1.066	27.07
22/22	1.050	26.67	1.116	28.34
23/23	1.100	27.94	1.166	29.61
24/24	1.150	29.21	1.216	30.88
25/25	1.200	30.48	1.266	32.15
26/26	1.250	31.75	1.316	33.42
27/27	1.300	33.02	1.366	34.69
28/28	1.350	34.29	1.416	35.96
29/29	1.400	35.56	1.466	37.23
30/30	1.450	36.83	1.516	38.50
31/31	1.500	38.10	1.566	39.77
32/32	1.550	39.37	1.616	41.04
33/33	1.600	40.64	1.666	42.31
34/34	1.650	41.91	1.716	43.58
35/35	1.700	43.18	1.766	44.85
36/36	1.750	44.45	1.816	46.12
37/37	1.800	45.72	1.866	47.39
38/38	1.850	46.99	1.916	48.66
39/39	1.900	48.26	1.966	49.93
40/40	1.950	49.53	2.016	51.20
41/41	2.000	50.80	2.066	52.47
42/42	2.050	52.07	2.116	53.74
43/43	2.100	53.34	2.166	55.01
44/44	2.150	54.61	2.216	56.28
45/45	2.200	55.88	2.266	57.55
46/46	2.250	57.15	2.316	58.82
47/47	2.300	58.42	2.366	60.09
48/48	2.350	59.69	2.416	61.36
49/49	2.400	60.96	2.466	62.63
50/50	2.450	62.23	2.516	63.90

PART NUMBER CODING

LPPB_ _1NFS_-RC

TERMINATION TYPES
C - SMT, SINGLE ROW FEMALE, PIN 1 (STANDARD)
D - SMT, SINGLE ROW FEMALE, PIN 1 (OPPOSITE BEND)

NUMBER OF POSITIONS
(CONTACTS PER ROW, 02 THRU 50)

REVISIONS				
REV.	ECO. NO	DESCRIPTION	DATE	BY
G	2517	ADD NOTE 10 MATING PARTS	02/08/2012	LH
H	2673	UPDATE OPERATING TEMP, TAIL LENGTH TOLERANCE, PCB LAYOUT FOR TOP/BOTTEM ENTRY	09/14/2012	LH

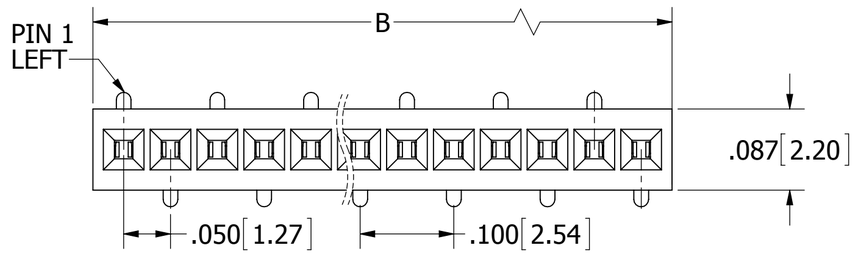

LPPB_ _1NFSC-RC
(STANDARD)

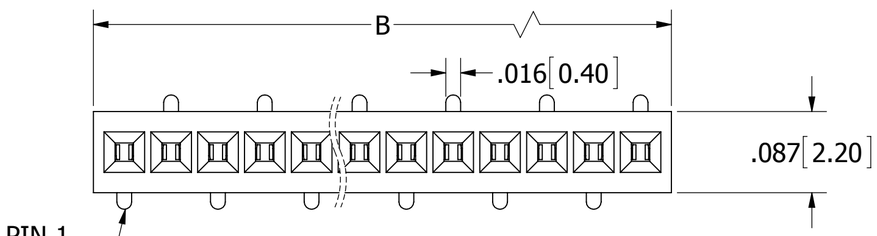

LPPB_ _1NFSD-RC
(OPPOSITE BEND, APPLICABLE ON EVEN PIN COUNTS)

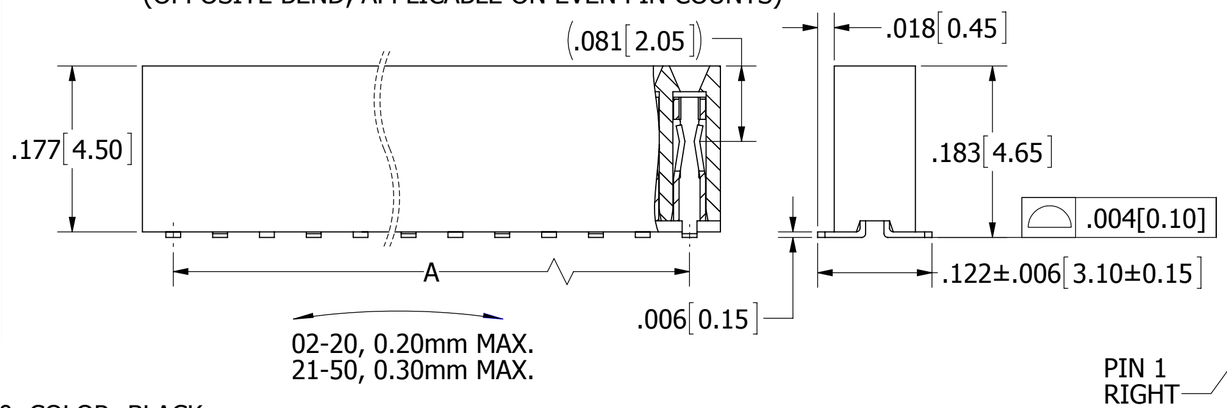

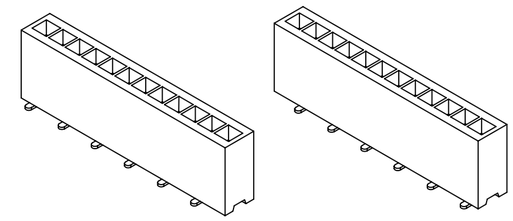

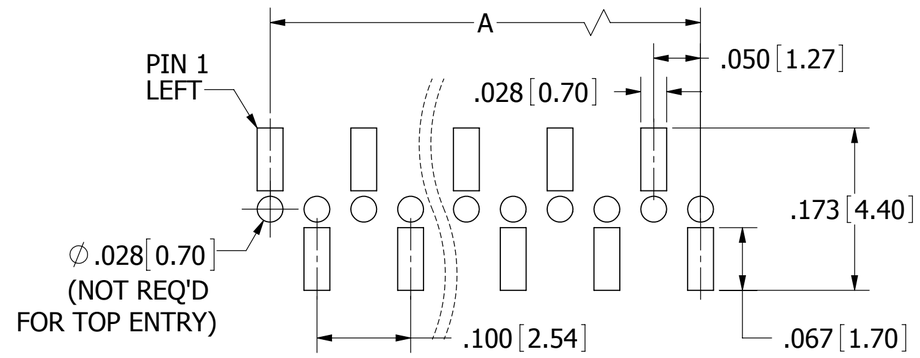

RECOMMENDED PCB LAYOUT
LPPB_ _1NFSC-RC

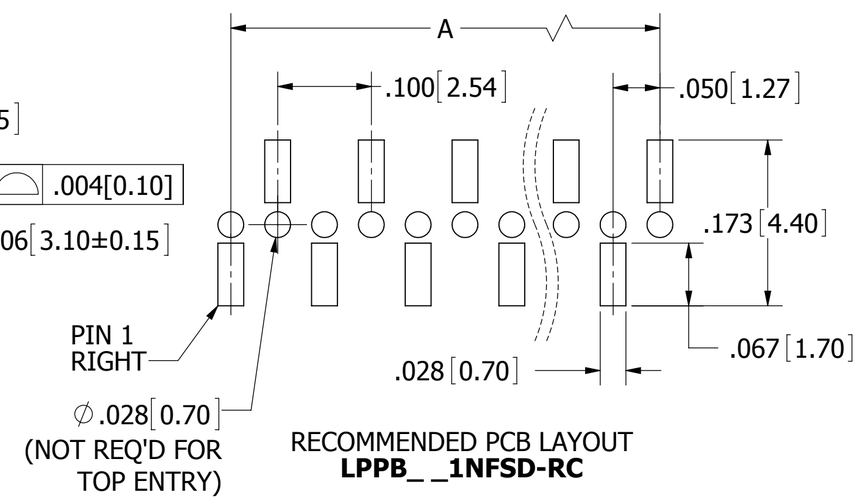

RECOMMENDED PCB LAYOUT
LPPB_ _1NFSD-RC

NOTES:
1. INSULATOR MATERIAL: L.C.P. , UL 94V-0, COLOR: BLACK.
   *PROCESSING TEMPERATURE = 260° C FOR 10 SECS MAX.
2. CONTACT MATERIAL: PHOSPHOR BRONZE
3. PLATING: .000030" ~ .000050" NICKEL UNDERPLATED, GOLD FLASH OVERALL.
4. OPERATING TEMPERATURE: -40°C TO +125° C.
5. INSULATION RESISTANCE: 5000 MEGA OHMS MIN.
6. CONTACT RESISTANCE: 20 MILLI OHMS MAX.
7. DIELECTRIC WITHSTANDING: 500V AC.
8. CURRENT RATING: 1 AMP.
9. MATES WITH SULLINS .050 [1.27] CONTACT CENTER MALE HEADER SERIES. (.016 [0.40] SQUARE POSTS)

*INDICATED TEMPERATURE AND TIME IS FOR COMPONENT INSULATOR. HIGHER PROCESSING TEMPERATURES MAY BE USED, PROVIDED HEAT IS APPLIED FROM BACK SIDE OF PCB, AND INSULATOR DOES NOT EXCEED INDICATED TEMPERATURE AND TIME.

RoHS COMPLIANT

UNLESS OTHERWISE SPECIFIED:
DIMENSIONS ARE IN INCHES [MM]

TOLERANCES:

ANGULAR: ± 1°

DECIMALS
.XX=± .012 [.3]
.XXX=± .008 [.20]
.XXXX=± .0040 [.100]

DRAWN	DATE	NAME
	01/20/2009	JH

THE INFORMATION HEREIN CONTAINS PROPIETARY INFORMATION OF SULLINS ELECTRONICS AND IS NOT TO BE REPRODUCED, USED OR DISCLOSED TO OTHERS FOR ANY PURPOSE EXCEPT AS SPECIFICALLY AUTHORIZED IN WRITING BY AN OFFICER OF SULLINS ELECTRONICS.

SULLINS CONNECTOR SOLUTIONS

TITLE HEADER FEMALE .050" [1.27mm] PITCH, 1 ROW, SMT TOP/BOTTOM ENTRY

PART NUMBER LPPB_ _1NFS_-RC

SIZE	CAGE CODE	DWG. NO.	REV
C	54453	10965	H

SCALE: 8:1 | SHEET 1 OF 1

FILE NAME: 10965, LPPB_ _1NFS_-RC