Distributed by:

JAMECO® ELECTRONICS

www.Jameco.com ✦ 1-800-831-4242

The content and copyrights of the attached material are the property of its owner.

Jameco Part Number 1866324

CHARACTERISTICS		
OPERATE TORQUE	4.0 IN/LBS MAX	2.2 IN/LBS TYP
PRETRAVEL	25° MAX	20° TYP
OVERTRAVEL	30° MIN	35° TYP
DIFFERENTIAL TRAVEL	3° MAX	1.5° TYP
FULL TRAVEL TORQUE	4.0 IN/LBS MAX	3.1 IN/LBS TYP

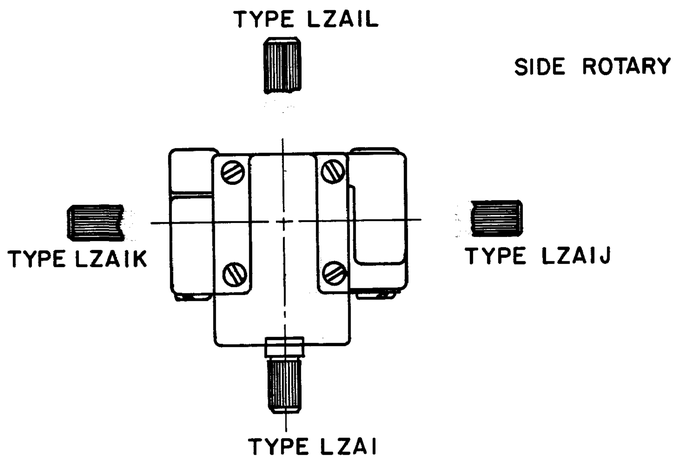

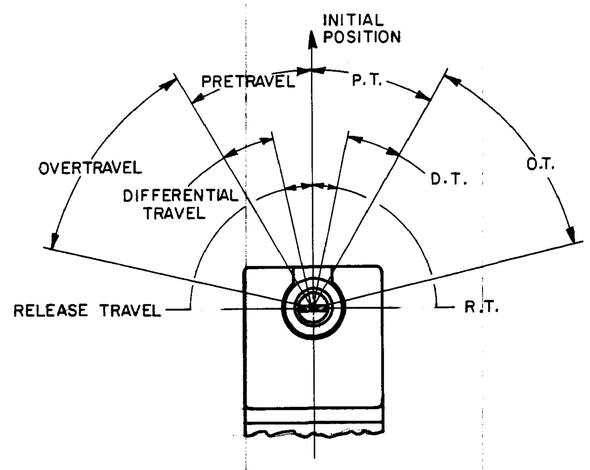

OPERATING DATA – SIDE ROTARY

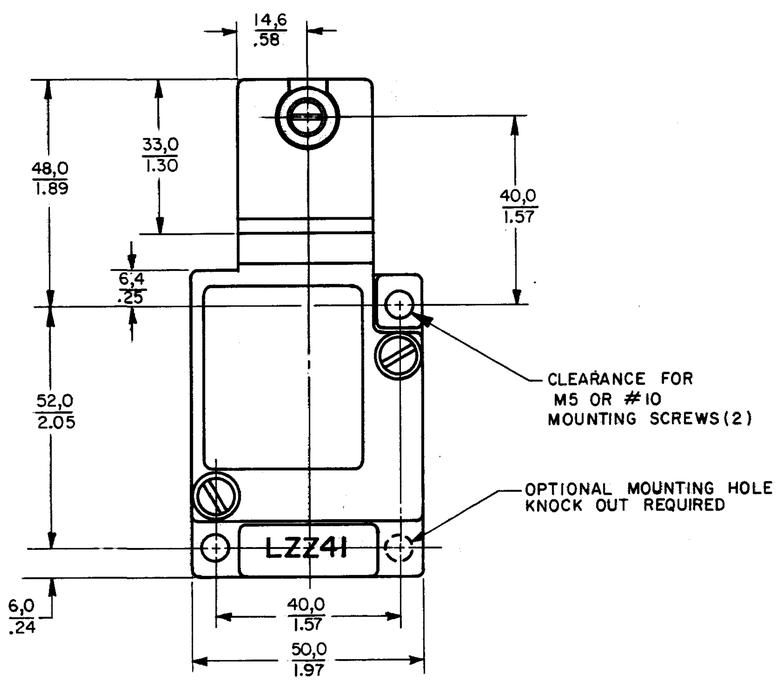

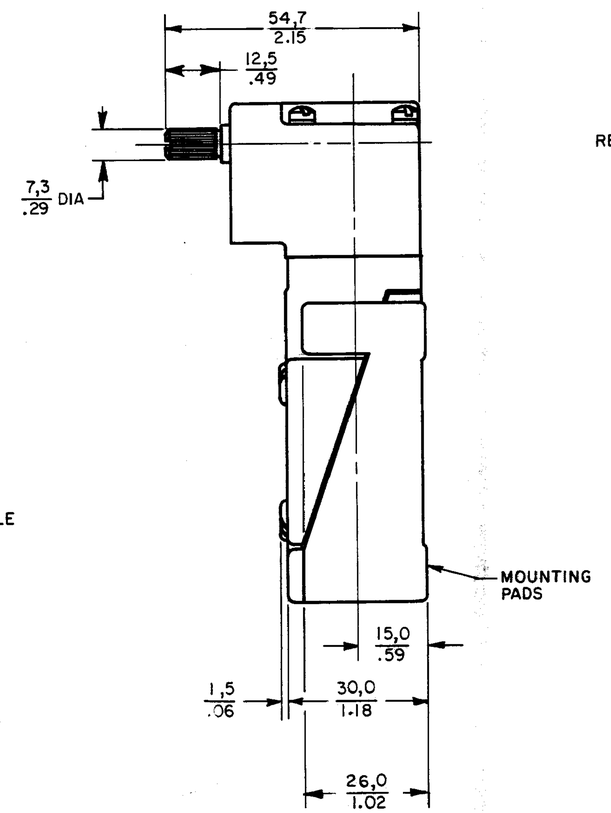

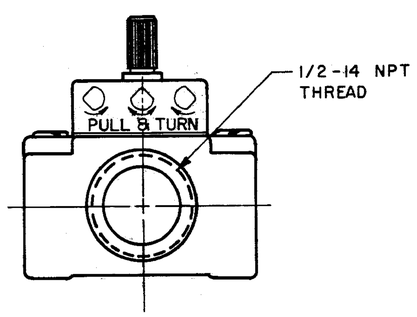

TYPE LZAI

THIS DRAWING COVERS A PROPRIETARY ITEM AND IS THE PROPERTY OF MICRO SWITCH, A DIVISION OF HONEYWELL. THIS DRAWING IS NOT TO BE COPIED OR USED WITHOUT THE APPROVAL OF MICRO SWITCH.

MICRO SWITCH
FREEPORT ILLINOIS U S A
A DIVISION OF HONEYWELL
FED. MFG. CODE 91929

SWITCH-ENCLOSED

CATALOG LISTING
LZA-LZY SERIES
CHART 4

THIRD ANGLE PROJECTION

SCALE FULL

DO NOT SCALE PRINT

TOLERANCES
APPLY TO DESIGN UNITS. CONVERSIONS ARE ONLY FOR REFERENCE. UNLESS NOTED, TOLERANCES ARE ±

	DIM. mm	TOL. mm/in	DIM. in	TOL. mm/in
NO PLACES	X	1/.04		
ONE PLACE	X.X	0.4/.016	X.X	0.8/.03
TWO PLACES	X.XX	0.15/.006	X.XX	0.38/.015
THREE PLACES			X.XXX	0.13/.005
ANGLES				

DESIGN UNITS SI METRIC ■ US CUSTOMARY □

RAW MATERIAL–COMMERCIAL STANDARD
MICRO SWITCH STANDARDS APPLY

DIMENSIONS ARE TO BE MET BEFORE PROTECTIVE COATINGS ARE APPLIED

WEIGHT

LZA-LZY SERIES
CHART 4

DRAWING NUMBER M
RELEASE NO. PR-8550 REPLACES
ISSUE 5
CHECK
CHECK 27 NOV 79
CHECK
DRAWN S L B 26 NOV 79

REVISIONS

A	PR-8550	KAG 28 OCT 80
B	CO 52594-A	TSK 16 DEC 82
C	CO 53619	GJW 4 AUG 83
D	CO 57968	TRF 19 SEPT 85

FQ-52863-A