THIS DRAWING IS UNPUBLISHED.
DIFFUSION RESTREINTE

RELEASED FOR PUBLICATION 20
LIBRE A LA DIFFUSION

© COPYRIGHT 20 BY -
ALL RIGHTS RESERVED.
TOUS DROITS RESERVES

FILS ADMISSIBLES (ACCEPTABLES WIRES)	
JAUGE (AWG) SECTION / 7 BRINS (7 STRANDS)	26 0.12mm²
ISOLANT: ØMAX / MATIERE (INSUL.: Ø MAX / MAT´L)	Ø1 / PVC

LOC	DIST
F	7

REVISIONS

P	LTR	DESCRIPTION MODIFICATIONS	DATE	DWN DESS.	APVD APP.
	B2	REVISED PER ECO-11-005150	28MAR2011	RK	HMR

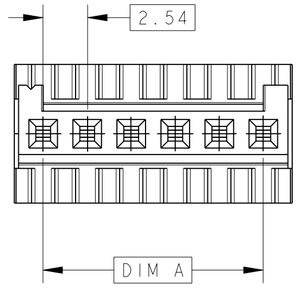

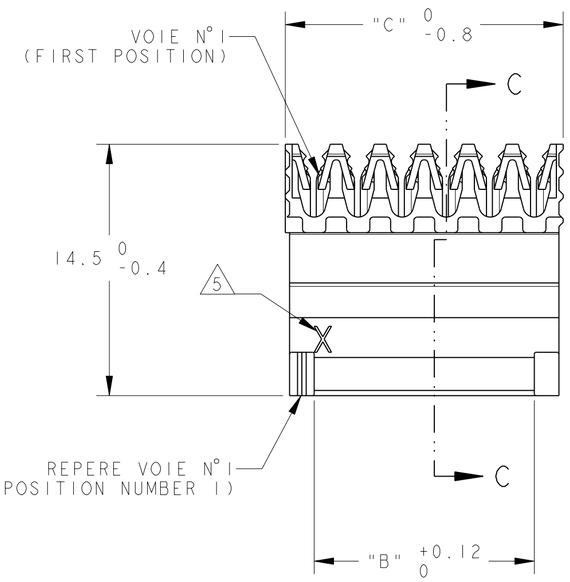

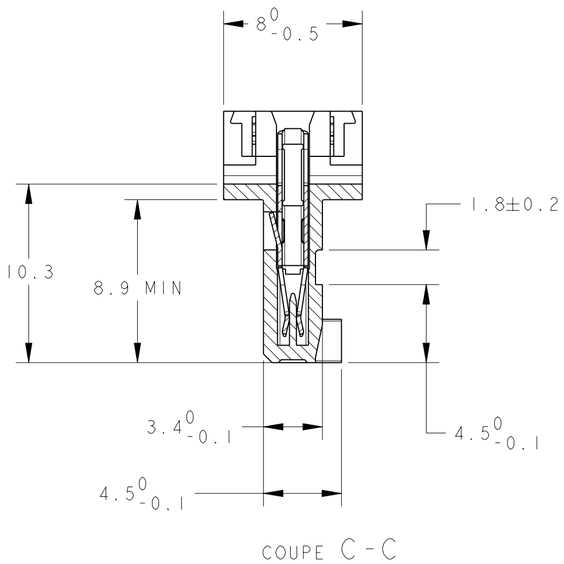

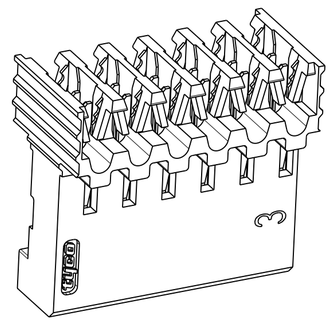

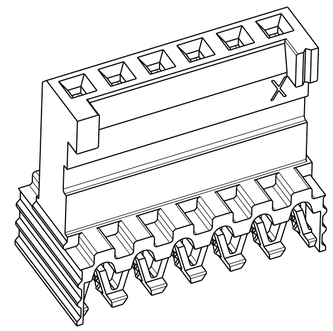

1 CES CONNECTEURS SONT PREVUS POUR ETRE ACCOUPLES AVEC LES EMBASES 'HE1402' SIMPLE RANGEE
(THESE CONNECTORS ARE DESIGNED TO BE MATED WITH 'HE1402' HEADERS SINGLE ROW)
-

2 LES REFERENCES SUIVIES D'UN ' * ' SONT LES VERSIONS NORMALISEES SELON LA 'CEI 603-8'
(THE PART-No FOLLOWED BY ' * ' ARE COVERED BY THE INTERNATIONAL STANDARD 'IEC 603-8')

3 REVETEMENT DES CONTACTS: ETAIN SANS PLOMB
(THE CONTACTS ARE TIN PLATED LEAD FREE)

4 CONNECTEURS CONDITIONNES SOUS TUBE PVC
(THESE CONNECTORS ARE PACKAGED IN TUBE)

5 ' X ' EST REMPLACE PAR LE DEUXIEME CHIFFRE DES JAUGES AWG
(' X ' REPLACED BY THE SECOND DIGIT OF AWG AS DEFINED IN TABLE)

6 MATIERES - BOITIER: PBT UL94V0
- CONTACTS: BRONZE PHOSPHOREUX
(MATERIALS - CASE: PBT UL94V0
- CONTACTS: PHOSPHOR BRONZE)

7 OBSOLETE PARTS: OBSOLETE CIS STREAMLINING PER D.RENAUD/D.SINISI

	C	A,B	Nb DE POS	4	VRAC (L.P.)
QUANT/TUBE	DIMENSIONS			REFERENCES (PART No)	
OBSOLETE	~~9~~	~~64.30~~	~~60.96~~	~~25~~	~~2-281711-5~~ ~~2-144271-5~~
OBSOLETE	~~9~~	~~61.76~~	~~58.42~~	~~24~~	~~2-281711-4~~ ~~2-144271-4~~
OBSOLETE	~~10~~	~~59.22~~	~~55.88~~	~~23~~	~~2-281711-3~~ ~~2-144271-3~~
OBSOLETE	~~10~~	~~56.68~~	~~53.34~~	~~22~~	~~2-281711-2~~ ~~2-144271-2~~
OBSOLETE	~~10~~	~~54.14~~	~~50.80~~	~~21~~	~~2-281711-1~~ ~~2-144271-1~~
OBSOLETE	~~11~~	~~51.60~~	~~48.26~~	~~20~~	~~2-281711-0~~ ~~2-144271-0~~
OBSOLETE	~~12~~	~~49.06~~	~~45.72~~	~~19~~	~~1-281711-9~~ ~~1-144271-9~~
	12	46.52	43.18	18	1-281711-8 * 1-144271-8 *
OBSOLETE	~~13~~	~~43.98~~	~~40.64~~	~~17~~	~~1-281711-7~~ ~~1-144271-7~~
OBSOLETE	~~14~~	~~41.44~~	~~38.10~~	~~16~~	~~1-281711-6~~ ~~1-144271-6~~
	15	38.90	35.56	15	1-281711-5 * 1-144271-5 *
OBSOLETE	~~16~~	~~36.36~~	~~33.02~~	~~14~~	~~1-281711-4~~ ~~1-144271-4~~
OBSOLETE	~~17~~	~~33.82~~	~~30.48~~	~~13~~	~~1-281711-3~~ ~~1-144271-3~~
	18	31.28	27.94	12	1-281711-2 * 1-144271-2 *
OBSOLETE	~~20~~	~~28.74~~	~~25.40~~	~~11~~	~~1-281711-1~~ ~~1-144271-1~~
	20	26.20	22.86	10	1-281711-0 * 1-144271-0 *
OBSOLETE	~~25~~	~~23.66~~	~~20.32~~	~~9~~	~~0-281711-9~~ ~~0-144271-9~~
	25	21.12	17.78	8	0-281711-8 * 0-144271-8 *
7 OBSOLETE	~~30~~	~~18.58~~	~~15.24~~	~~7~~	~~0-281711-7~~ ~~0-144271-7~~
	35	16.04	12.70	6	0-281711-6 * 0-144271-6 *
	40	13.50	10.16	5	0-281711-5 * 0-144271-5 *
	50	10.96	7.62	4	0-281711-4 * 0-144271-4 *
	70	8.42	5.08	3	0-281711-3 * 0-144271-3 *
	100	5.88	2.54	2	0-281711-2 0-144271-2

THIS DRAWING IS A CONTROLLED DOCUMENT.

DIMENSIONS: mm

TOLERANCES UNLESS OTHERWISE SPECIFIED:
TOLERANCES NON SPECIFIEES
(SUIV NB DE DECIMALES)
0 PLC/DEC: ±-
1 PLC/DEC: ±0.3
2 PLC/DEC: ±-
3 PLC/DEC: ±-
4 PLC/DEC: ±-
ANGLES ±5°

MATERIAL/MATIERE: 6
FINISH/FINITION: 3

DWN/DESSINE 17NOV2000 C. COMBEDOUZON
CHK/VERIFIE 17NOV2000 T. CORRIOU
APVD/APROUVE 17NOV2000 Y. PETRONIN
PRODUCT SPEC SPEC. PRODUIT 108-15053
APPLICATION SPEC SPEC. APPLICATION 114-15030
WEIGHT MASSE APPROX. -

TE Connectivity

NAME TITRE: HE 1402 PLUG 90deg IDC SINGLE ROW
-

SIZE FORMAT: A2 | CAGE CODE: 00779 | DRAWING NO No PLAN: C-281711 | RESTRICTED TO RESERVE A: -

CUSTOMER DRAWING /PLAN CLIENT UNIQUEMENT POUR REFERENCE | SCALE ECHELLE 4:1 | SHEET FEUILLE 1 OF DE 1 | REV B2