40 CHARACTERS X 2 LINES
CHARACTER SIZE: 3.15W X 4.80H mm (5 X 7 DOTS)
3.15W X 5.50H mm (5 X 8 DOTS)

MDL(S)-40266

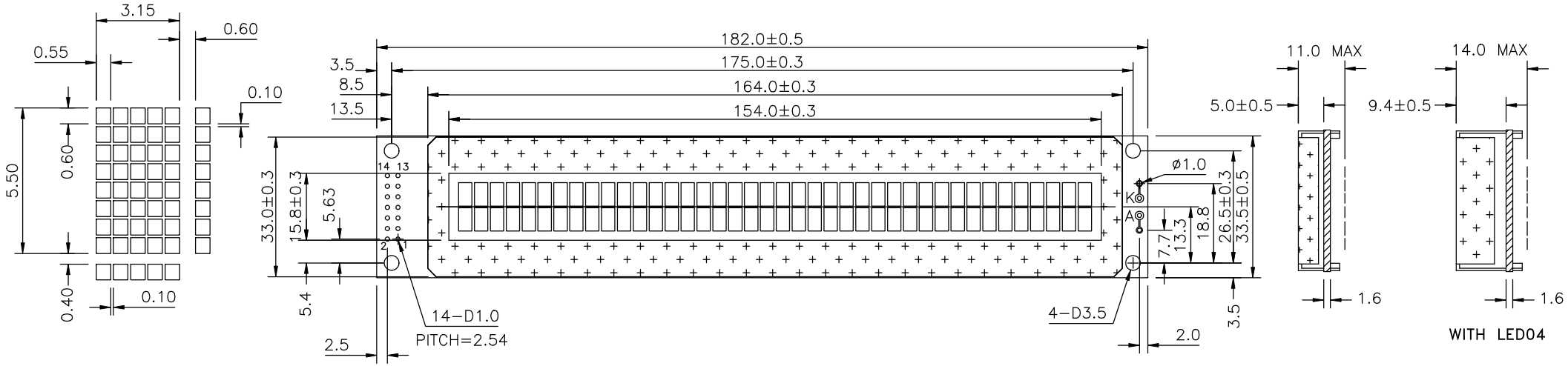
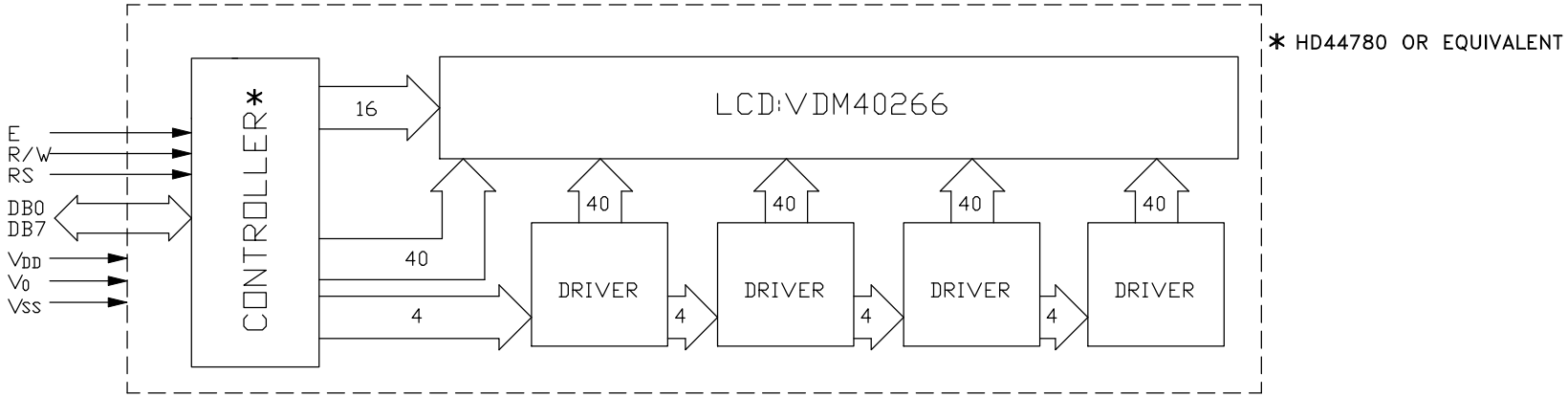
14 PIN CONNECTION	1	2	3	4	5	6	7	8	9	10	11	12	13	14	A	K
	VSS	VDD	V0	RS	R/W	E	DB0	DB1	DB2	DB3	DB4	DB5	DB6	DB7	LED(+)	LED(−)