THIS DRAWING IS UNPUBLISHED. RELEASED FOR PUBLICATION -,- .
© COPYRIGHT - By - ALL RIGHTS RESERVED.

LOC	DIST
AF	50

REVISIONS

P	LTR	DESCRIPTION	DATE	DWN	APVD
	J	REVISED PER ECO-13-017339	05NOV13	JR	PD

1 CONTINUOUS STRIP ON REELS AT A FEED OF 21.33±0.13 [.840±.005].

2 MATING TAB THK IS 0.81±0.03 [.032±.001]

3 WIRE SIZE IS #18-#14 AWG

4 INSULATION RANGE IS 3.05-4.32 [.120-.170] DIA

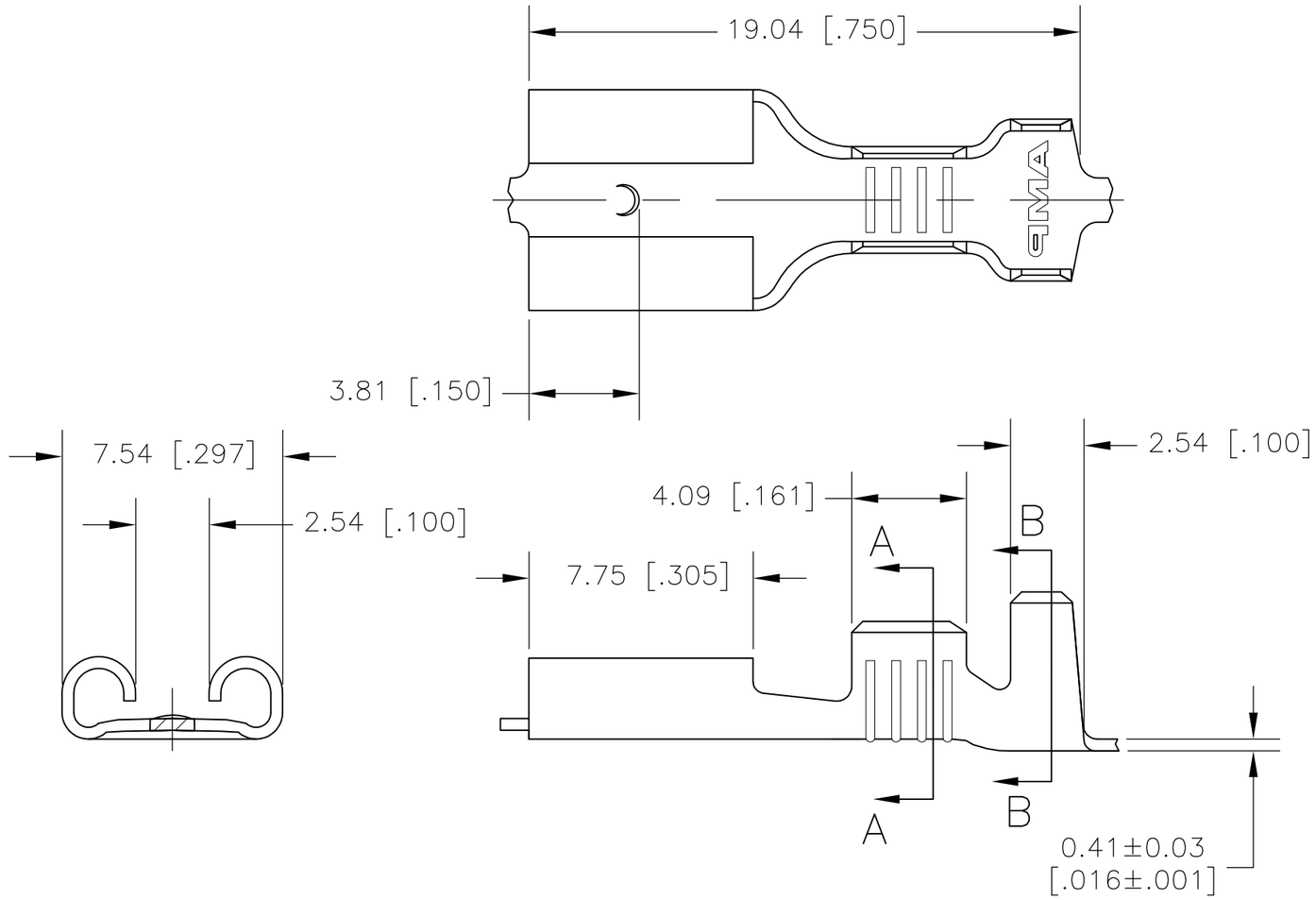

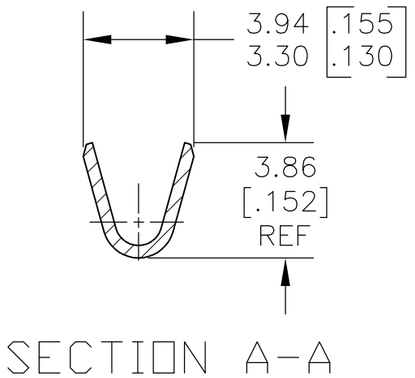

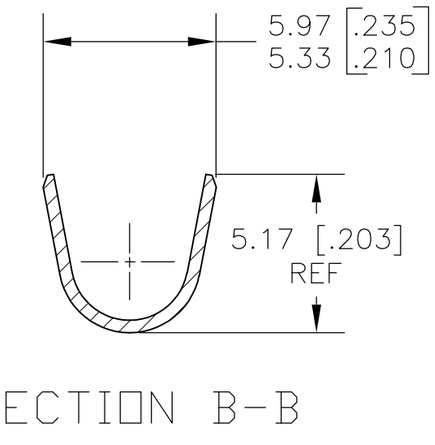

TIN	60650-2
-	60650-1
FINISH	PART NO

THIS DRAWING IS A CONTROLLED DOCUMENT.

DIMENSIONS: MM [INCHES]

TOLERANCES UNLESS OTHERWISE SPECIFIED:

0 PLC	± -
1 PLC	± -
2 PLC	± 0.38 [.015]
3 PLC	± -
4 PLC	± -
ANGLES	± 5°

MATERIAL: BRASS

FINISH: SEE TABLE

DWN jr ruth 30JAN08
CHK P DESANTIS 30JAN08
APVD P DESANTIS 30JAN08
PRODUCT SPEC —
APPLICATION SPEC —
WEIGHT —

CUSTOMER DRAWING

TE Connectivity

NAME: RECEPTACLE, FASTON, .250 SERIES —

SIZE	CAGE CODE	DRAWING NO	RESTRICTED TO
A3	00779	C-60650	—

SCALE	SHEET	REV
5:1	1 OF 1	J