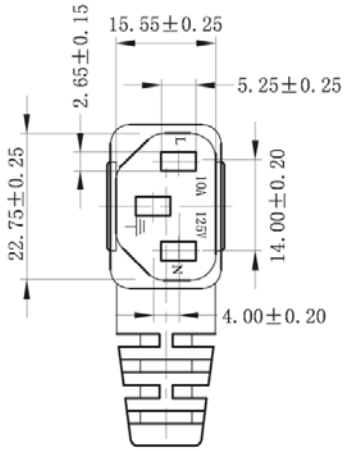

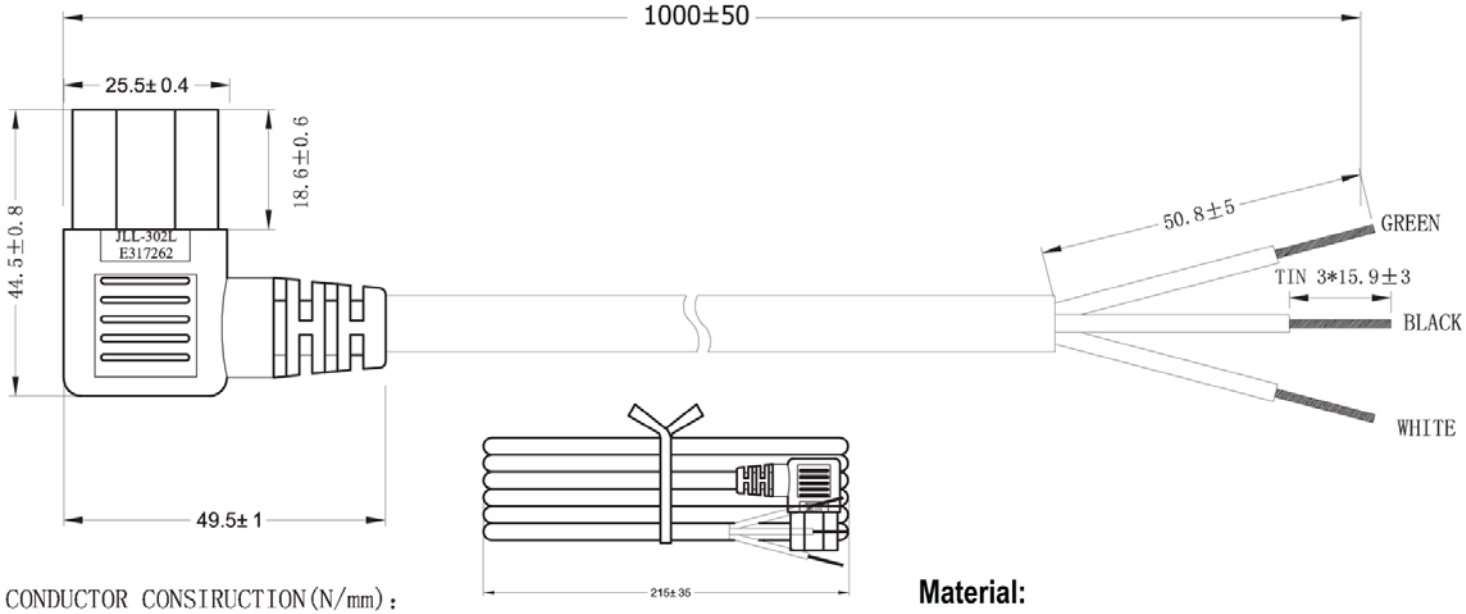

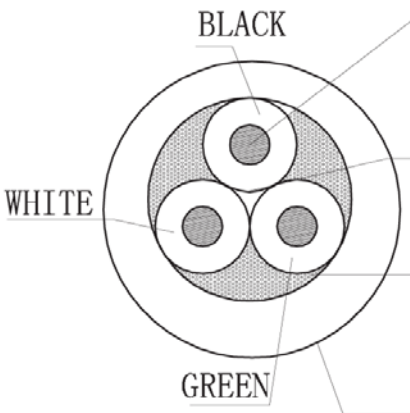

CONDUCTOR CONSTRUCTION(N/mm):
41/0.16AS

PVC INSULATION AVERAGE
THICKNESS: 0.38mm
ID:2.10±0.1mm

Fill

PVC JACKET AVERAGE
THICKNESS: 0.76mm
OD:6.50±0.15mm

Material:

- E243711(UL) SVT 3 x 18AWG(0.824MM²)
  VW-1, 60°C 300V
  - CSA 228191 SVT 3 x 18AWG(0.824MM²)
  FT2 60°C 300V -LF-
- Jacket Color: Black
- E - Green; L - Black; N - White

Electrical:

- 100% Open & Short Testing
- Insulation Resistance: 100MΩ (Min.)
- Voltage: 500V DC / 1 Min.

Unit: MM

RoHS Complaint

Scale	1:1						Name	Item No.
TOLERANCE					Drawn	12.27.11	Chappell	AK500-RA-6-1
X.X	±0.40				Approved			Title Power Cord - SVT Right Angle/Open End, Unshielded, 60°C, 18AWG, 1 Meter
X.XX	±0.25							
X.XXX	±0.15							Drawing No. rev00
Angle	±3°							
			Modification	Date	Name			Replace Sheet

ASSMANN WSW components