THIS DRAWING IS UNPUBLISHED. RELEASED FOR PUBLICATION -.-. .
© COPYRIGHT - BY TYCO ELECTRONICS CORPORATION. ALL RIGHTS RESERVED.

LOC	DIST
AD	00

REVISIONS

P	LTR	DESCRIPTION	DATE	DWN	APVD
	D	REVISED PER ECN 0S12-0304-05	13JUN06	JDP	GES

CONNECTOR ASSEMBLY EXAMPLARY LOADED 9

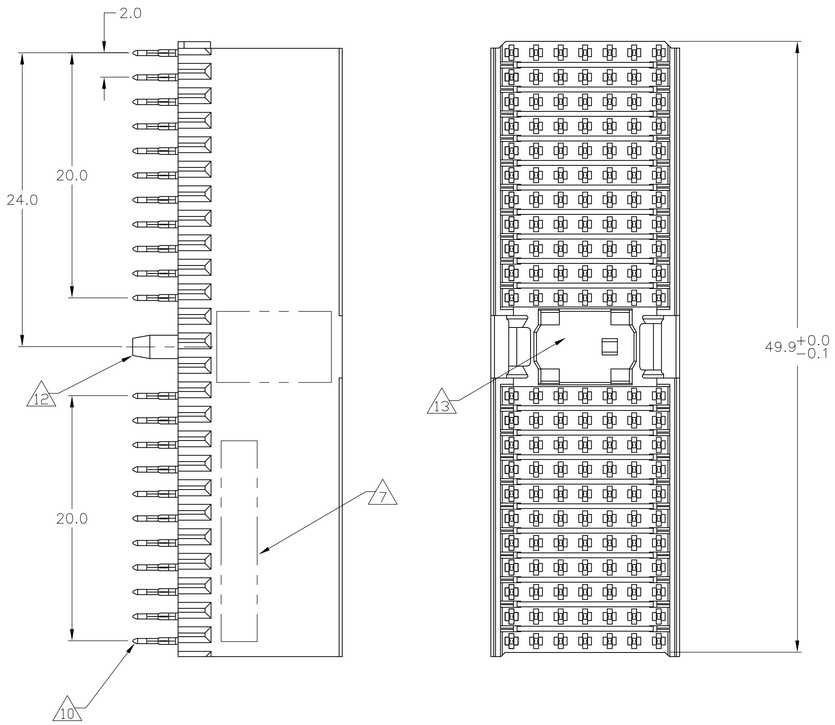

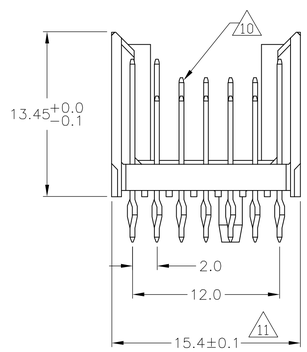

CONTACT DIMENSIONS

SCALE 5:1

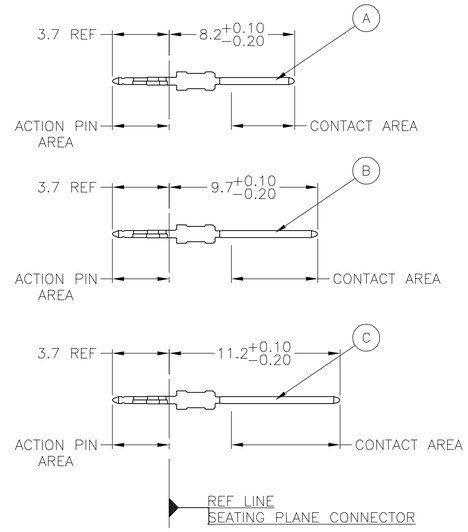

CONTACT LAYOUT

	z	a	b	c	d	e	f
1	C	A	A	A	A	A	C
2	C	A	A	A	A	A	C
3	C	A	A	A	A	A	C
4	C	A	A	A	A	A	C
5	C	A	A	A	A	A	C
6	C	A	A	A	A	A	C
7	C	A	A	A	A	A	C
8	C	A	A	A	A	A	C
9	C	A	A	A	A	A	C
10	C	C	B	B	B	B	C
11	C	C	B	B	B	B	C
	MULTI PURPOSE CENTER						
15	C	C	B	B	B	B	C
16	C	C	B	B	B	B	C
17	C	A	A	A	A	A	C
18	C	A	A	A	A	A	C
19	C	A	A	A	A	A	C
20	C	A	A	A	A	A	C
21	C	A	A	A	A	A	C
22	C	A	A	A	A	A	C
23	C	A	A	A	A	A	C
24	C	A	A	A	A	A	C
25	C	A	A	A	A	A	C

RECOMMENDED PCB-HOLE LAYOUT COMPONENT SIDE SHOWN

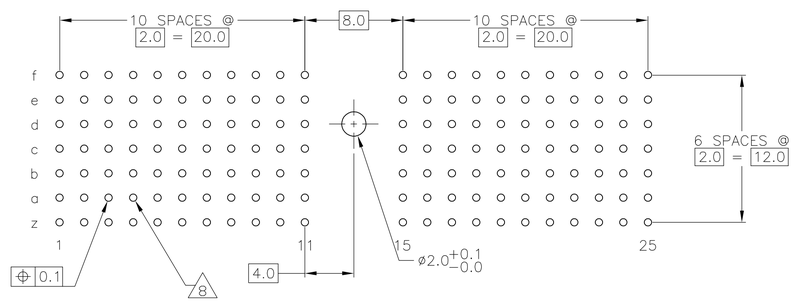

PLATED THRU HOLES PARAMETERS

REFERENCE APPLICATION SPECIFICATION

FINISH	PART NUMBER
2 6 14	1-188734-9
2 5 14	188734-9
2 4	188734-4
2 3	188734-1

THIS DRAWING IS A CONTROLLED DOCUMENT.

DIMENSIONS: mm

TOLERANCES UNLESS OTHERWISE SPECIFIED:
0 PLC ± –
1 PLC ± 0.1
2 PLC ± –
3 PLC ± –
4 PLC ± –
ANGLES ± –

MATERIAL 1

FINISH SEE TABLE

DWN B.CARBO 26AUG05
CHK G.SKIPPER 26AUG05
APVD G.SKIPPER 26AUG05
PRODUCT SPEC 108-19082
APPLICATION SPEC 114-19029
WEIGHT –

tyco Electronics
Tyco Electronics Corporation
Harrisburg, Pa 17105-3608

NAME MALE ASSEMBLY, Z-PACK 2mm HM, TYPE A

SIZE A1 | CAGE CODE 00779 | DRAWING NO C-188734 | RESTRICTED TO –

CUSTOMER DRAWING | SCALE 4:1 | SHEET 1 OF 2 | REV D

THIS DRAWING IS UNPUBLISHED. RELEASED FOR PUBLICATION -.- .
© COPYRIGHT - BY TYCO ELECTRONICS CORPORATION. ALL RIGHTS RESERVED.

LOC	DIST
AD	00

REVISIONS

P	LTR	DESCRIPTION	DATE	DWN	APVD
	—	SEE SHEET 1	-	—	—

1. MATERIAL:
   CONTACT: PHOSPHOR BRONZE.
   HOUSING: GLASS-FILLED POLYESTER.
2. GENERAL PLATING SPECIFICATION: UNDERPLATING (ENTIRE CONTACT): 1.27µm MIN NICKEL AND ACTION PIN: 0.5µm MIN TIN/LEAD.
   FOR PLATING OF MATING SURFACES SEE APPLICABLE SPECIFICATION REFERENCE FOR EACH DASH NUMBER.
3. CONFORMS TO ALL TESTING ACCORDING TO IEC 61076-4-101 PERFORMANCE LEVEL 2.
4. CONFORMS TO ALL TESTING ACCORDING TO IEC 61076-4-101 PERFORMANCE LEVEL 1.
5. CONNECTOR TESTED AND QUALIFIED AGAINST TELCORDIA GR-1217-CORE QUALITY LEVEL 3, CENTRAL OFFICE APPLICATIONS.
6. CONNECTOR TESTED AND QUALIFIED AGAINST TELCORDIA GR-1217-CORE QUALITY LEVEL 3, UNCONTROLLED ENVIROMENT APPLICATIONS.
7. CONNECTOR MARKED WITH PART NUMBER AND DATE CODE. ADDITIONAL CHARACTERS OR MARKINGS, AS WELL AS THE LOCATION OF THE MARKINGS, MAY BE ADDED FOR TRACEABILITY BASED UPON MANUFACTURERS DISCRETION.
8. PLATED-THROUGH HOLES AT 2x2mm SQUARE GRID PATTERN DEFINED BY CONTACT LAYOUT.
9. FOR ACTUAL PIN LOADING SEE "CONTACT LAYOUT".
10. FOR ACTUAL PIN DIMENSIONS SEE "CONTACT DIMENSIONS".
11. TO BE MEASURED AT BOTTOM OF SHROUD.
12. POLARIZATION FEATURE.
13. AREA RESERVED FOR KEYING PART (BASIC P/N 100525).
14. CONNECTOR LUBRICATED WITH BELCORE APPROVED LUBRICANT, TECHNICAL REFERENCE: TR-NWT-001217 ISSUE 1, SEP 1992.

THIS DRAWING IS A CONTROLLED DOCUMENT.

DIMENSIONS: mm

TOLERANCES UNLESS OTHERWISE SPECIFIED:
0 PLC ± -
1 PLC ± 0.1
2 PLC ± -
3 PLC ± -
4 PLC ± -
ANGLES ± -

MATERIAL: SEE SHEET 1
FINISH: SEE SHEET 1

DWN B.CARBO 26AUG05
CHK G.SKIPPER 26AUG05
APVD G.SKIPPER 26AUG05
PRODUCT SPEC 108-19082
APPLICATION SPEC 114-19029
WEIGHT —

Tyco Electronics Corporation
Harrisburg, Pa 17105-3608

NAME: MALE ASSEMBLY, Z-PACK 2mm HM, TYPE A

SIZE	CAGE CODE	DRAWING NO	RESTRICTED TO
A1	00779	C-188734	—

CUSTOMER DRAWING

SCALE	SHEET	REV
4:1	2 OF 2	D