THIS DRAWING IS UNPUBLISHED. RELEASED FOR PUBLICATION 1997
© COPYRIGHT 1997 - ALL RIGHTS RESERVED.

LOC	DIST
A1	-

REVISIONS

P	LTR	DESCRIPTION	DATE	DWN	APVD
	B13	Released As per ECR-09-005436	9-Mar-2009	CJ	TS
	B14	ECR-11-002636	05APR2011	SR	AR

PN 1-1,2-1,3-1,4-1,5-1,1-2,2-2,3-2
4-2,5-2,6-1,~~4-3~~,1-8,2-8,3-8,4-8,5-8,
4-9,2-9,3-9,4-9 & 5-9

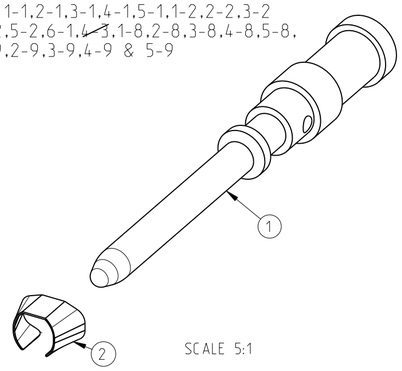

SCALE 5:1

NOTES

1. MATERIAL SEE TABLE
2. SURFACE SEE TABLE
3. ASSEMBLY WEIGHT SEE TABLE
4. PACKAGING: 50 PIECES IN POLY-BAG 0-1243085-8
5. PACKAGING: 500 PIECES IN POLY-BAG 0-1243085-8
6. PACKAGING: 10 PIECES IN POLY-BAG 0-1243085-8
7. CROSS-SECTION MARKING

PN 1-1,2-1,3-1,4-1,5-1,1-2,2-2,3-2
4-2,5-2,6-1,~~4-3~~,1-8,2-8,3-8,4-8,5-8,
4-9,2-9,3-9,4-9 & 5-9

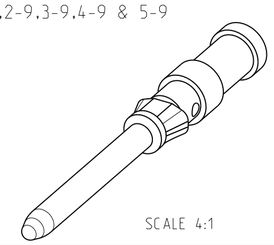

SCALE 4:1

PN 1-1,2-1,3-1,4-1,5-1,1-2,2-2,3-2
4-2,5-2,6-1,~~4-3~~,1-8,2-8,3-8,4-8,5-8,
4-9,2-9,3-9,4-9 & 5-9

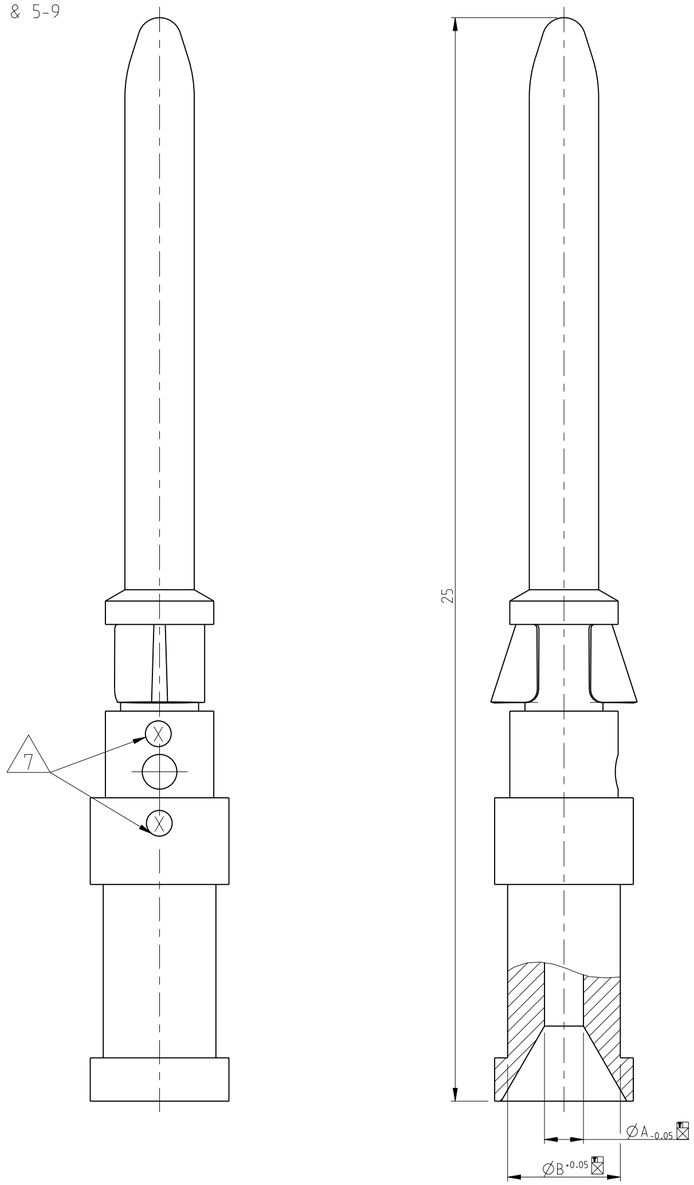

OBSOLETE	OBSOLETE	OBSOLETE															3	1	2			7	
1	1	1	1	1	1	1	1	1	1	1	1	1	1	1	Catch Spring		Stainless Steel					2
1															Pin Contact 1.5 mm²	0.00062	Ms/Brass	Ag/Ni	1.8	3.0	4	1
	1														Pin Contact 4.0 mm²	0.00059	Ms/Brass	Ag/Ni	2.4	3.2	6	
				1											Pin Contact 2.5 mm²	0.00067	Ms/Brass	Au	2.2	3.2	5	
					1										Pin Contact 1.5 mm²	0.00067	Ms/Brass	Au	1.8	3.0	4	
						1									Pin Contact 0.75-10 mm²	0.00063	Ms/Brass	Au	1.45	2.6	3	
							1								Pin Contact 0.5 mm²	0.00062	Ms/Brass	Au	1.1	2.6	2	
								1							Pin Contact 0.14-0.37 mm²	0.00061	Ms/Brass	Au	0.9	2.6	1	
									1						Pin Contact 2.5 mm²	0.00065	Ms/Brass	Ag/Cu	2.2	3.2	5	
										1					Pin Contact 1.5 mm²	0.00067	Ms/Brass	Ag/Cu	1.8	3.0	4	
											1				Pin Contact 0.75-10 mm²	0.00063	Ms/Brass	Ag/Cu	1.45	2.6	3	
												1			Pin Contact 0.5 mm²	0.00062	Ms/Brass	Ag/Cu	1.1	2.6	2	
OBSOLETE			1												~~Pin Contact 0.14-0.37 mm²~~	~~0.00061~~	~~Ms/Brass~~		~~0-9~~	~~2.6~~	~~1~~	
OBSOLETE				1											~~Pin Contact 0.14-0.37 mm²~~	~~0.00065~~	~~Fe~~	~~Au~~	~~0-9~~	~~2.6~~	~~1~~	
														1	Pin Contact 0.14-0.37 mm²	0.00067	Ms/Brass	Ag/Cu	0-9	2.6	1	
		6	6	4	4	4	4	4	4	4	4	4	4	4								
		1-4	1-3	5-2	4-2	3-2	2-2	1-2	5-1	4-1	3-1	2-1	1-1		DESCRIPTION	WEIGHT IN (Kg)	MATERIAL	SURFACE	ØA	ØB	CROSS SECTION MARKING	POS
				5	5	5	5	5	5	5	5	5	5									
				5-9	4-9	3-9	2-9	1-9	5-8	4-8	3-8	2-8	1-8									
HND-C-Sti.Ag/Ni.1.5 mm²	HND-C-Sti.Ag/Ni.4.0 mm²	HN.D-C-Sti.CuNi.0.14 -0.37 mm²	HN.D-C-Sti.Fe.Au.0.14 -0.37 mm²	HN.D-C-Sti.Au.2.5 mm²	HN.D-C-Sti.Au.1.5 mm²	HN.D-C-Sti.Au.0.75-1.00 mm²	HN.D-C-Sti.Au.0.5 mm²	HN.D-C-Sti.Au.0.14 -0.37 mm²	HN.D-C-Sti.Ag.2.5 mm²	HN.D-C-Sti.Ag.1.5 mm²	HN.D-C-Sti.Ag.0.75-1.00 mm²	HN.D-C-Sti.Ag.0.5 mm²	HN.D-C-Sti.Ag.0.14 -0.37 mm²									

THIS DRAWING IS A CONTROLLED DOCUMENT.

DIMENSIONS: mm

TOLERANCES UNLESS OTHERWISE SPECIFIED:
ISO 8015
DIN ISO 2768 mm-E
DIN 16901-120
0 PLC
1 PLC
2 PLC
3 PLC
4 PLC
ANGLES ±1°

MATERIAL 1 -

FINISH 2 -

DWN	Braun	23.07.1997
CHK	Schnurpfeil	23.07.1997
APVD	-	
PRODUCT SPEC	108-74018	
APPLICATION SPEC	114-74015	
WEIGHT	-	

TE Connectivity

NAME: PIN CONTACT SERIES HN.D -

SIZE	CAGE CODE	DRAWING NO	RESTRICTED TO
A2	00779	C-1105050	-

CUSTOMER DRAWING | SCALE 10:1 | SHEET 1 OF 1 | REV B14

1471-9 (3/11)

Pro/ENGINEER DRAWING