PART NO.	ENGINEERING NO.	FINISHED LENGTH
1300100863	114030K12M005	0.5M+44.5mm-0 [1'8"+1.75-0]
1300100864	114030K12M010	1.0M+55.6mm-0 [3'3"+2.19-0]
1300100865	114030K12M020	2.0M+88.9mm-0 [6'7"+3.50-0]

CHART C1

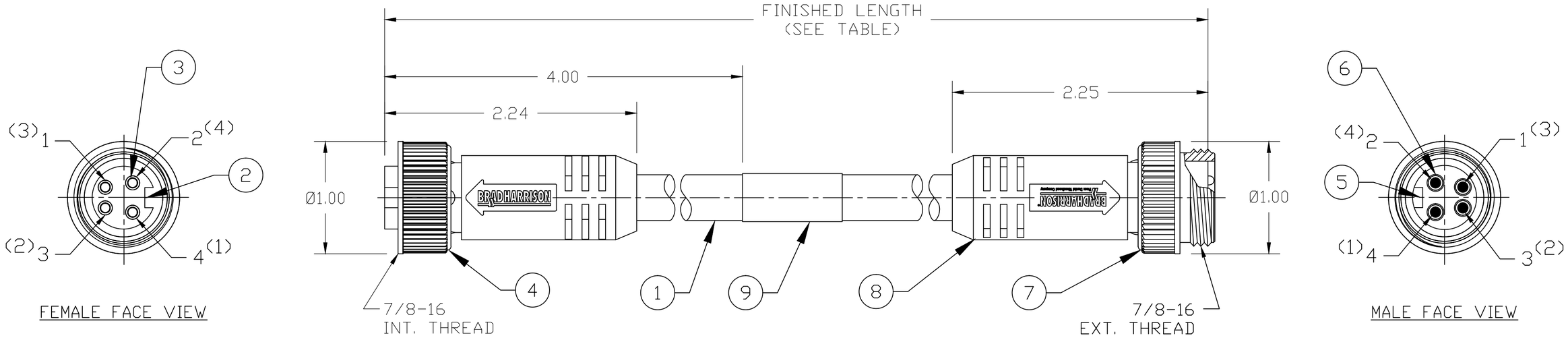

NOTES:
1. MATERIAL: SEE TABLE
2. FINISH: SEE TABLE
3. ELECTRICAL:
   VOLTAGE: 483V PER IEC 60664
   600V PER UL 2238
   CURRENT: 8A
4. TEMP RATING: -20° TO +90°C
5. PROTECTION: IP67 (WHEN MATED)
6. UL CERTIFICATION: UL FILE NO. E152210
7. ALL DIMS ARE FOR REFERENCE
   UNLESS NOTED OTHERWISE

C1

CENELEC EN 50 044 PINOUT SHOWN
(SAE-J-1738A SHOWN IN PARENTHESIS)

4 (1)	BLACK	4 (1)
3 (2)	BLUE	3 (2)
1 (3)	BROWN	1 (3)
2 (4)	WHITE	2 (4)

114030K12XXXX

LENGTH
M010 = 1 METER
M100 = 10 METER
F050 = 5 FEET
F500 = 50 FEET
T=100 METER
T001 = 101 METER
T010 =110 METER

C1

MECHANICAL CHARACTERISTICS:

TORSIONAL FLEX TEST	20 MILLION CYCLES PER MIL-C-13777G
BEND FLEX TEST	20 MILLION CYCLES PER MIL-C-13777G
WELD SLAG RESISTANCE	WOODHEAD STANDARD S-300

C1

CABLE LENGTH TOLERANCES
>.3M [1FT]: +19mm-0 [+.75in-0]
.3 - .9M [1 - 3FT]: +44.5mm-0 [+1.75in-0]
.9 - 1.8M [3 - 6FT]: +55.6mm-0 [+2.19in-0]
1.8 - 3.7M [6 - 12FT: +88.9mm-0 [+3.50in-0]
3.7 - 7.3M [12 - 24FT]: +165.1mm-0 [+6.50in-0]
7.3-14.6M [24 - 48FT]: +317.5mm-0 [+12.50in-0]
14.6 - 30.5M [48-100FT]: +622.3mm-0 [+24.50in-0]
OVER 30M [100FT] +2% OF FINISHED LENGTH

ITEM	DESCRIPTION	MATERIAL	FINISH
9	WRAP LABEL	VINYL	BLACK/YELLOW
8	OVERMOLD	ARNITEL	YELLOW
7	COUPLING, MALE	ZINC DIE-CAST	BLACK
6	CONTACT PIN	COPPER ALLOY	GOLD PLATED
5	MALE INSERT (A-SIZE)	ARNITEL	YELLOW
4	COUPLING, FEMALE	ZINC DIE-CAST	BLACK
3	CONTACT SOCKET	COPPER ALLOY	GOLD PLATED
2	FEMALE INSERT (A-SIZE)	ARNITEL	YELLOW
1	CABLE, 16/4 TC-ER (HI-FLEX)	TPE JACKET	YELLOW

REV	DESCRIPTION
C1	IEC VOLTS WAS 320, ADD CHART & TOLS
	EC NO: IPG2017-0882 3/31/17
	DRWN: RSTONE
	CH'KD: M ZIELIN 2017/04/10
	APPR: BWOODMAN2012/03/08

QUALITY SYMBOL
▼=0
C=0

GENERAL TOLERANCES (UNLESS SPECIFIED)	mm	INCH
4 PLACES	±---	±---
3 PLACES	±---	±---
2 PLACES	±---	±---
1 PLACE	±---	±---
ANGULAR ±---°		

DRAFT WHERE APPLICABLE MUST REMAIN WITHIN DIMENSIONS

DIMENSION STYLE: INCH ONLY
SCALE: ---
DESIGN UNITS: INCH
THIRD ANGLE PROJECTION

DRAWN BY: VOU DATE: 2012/01/19
CHECKED BY: TWOLDEGE DATE: 2012/02/17
APPROVED BY: JFMURPHY DATE: 2012/03/08

TITLE: MINI-CHANGE CORDSET 4P MALE/FEMALE ST/ST #16/4 TPE CABLE

molex MOLEX INCORPORATED

MATERIAL NO.: ---
DOCUMENT NO.: SD-130010-016
SHEET NO.: 1 0F 1
SIZE: C

THIS DRAWING CONTAINS INFORMATION THAT IS PROPRIETARY TO MOLEX INCORPORATED AND SHOULD NOT BE USED WITHOUT WRITTEN PERMISSION