© 2023 TE Connectivity. All Rights Reserved.

REVISIONS					
P	LTR	DESCRIPTION	DATE	DWN	APVD
	A2	CHANGE IN WIRE RANGE	18APR2023	CI	KT

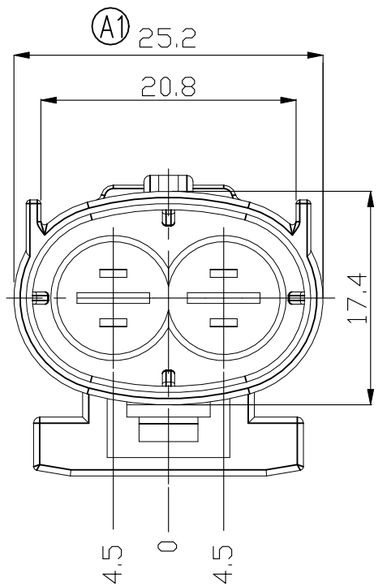

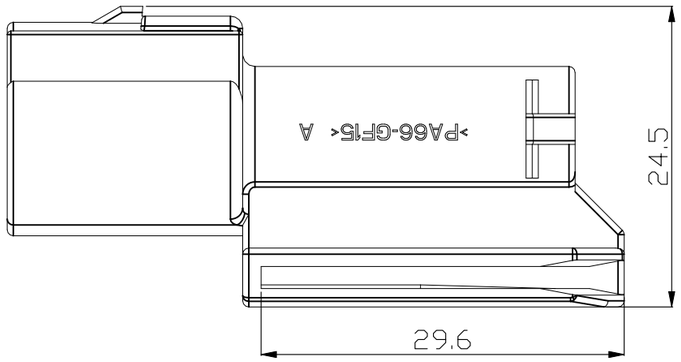

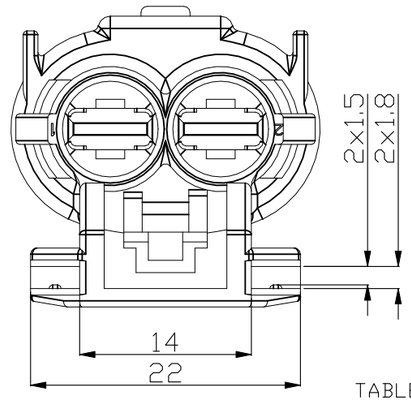

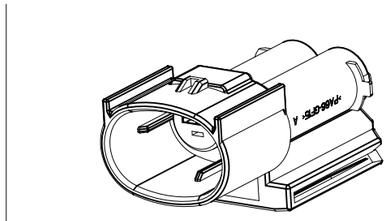

ISOMETRIC VIEW

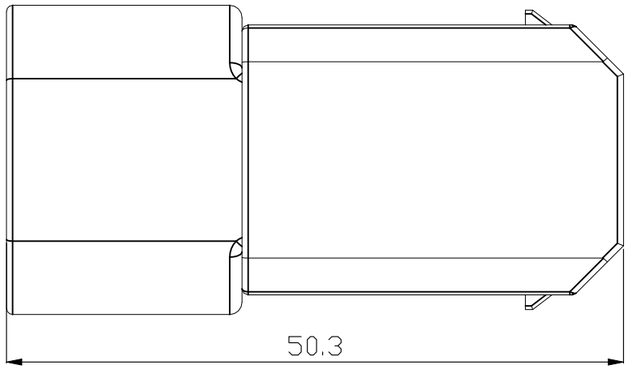

TABLE 1.

TAPE	PART NO.	WIRE RANGE (mm²)	INSULASION DIA. (mm)	FINISH
MCP6.3	1-962917-1	0.5 - 1.0	1.4 - 2.1	CuSn, Tin
	1-962917-2			CuSn, Silver
	2-962917-1			CuFe, Tin
	2-962917-2			CuFe, Silver
	1-962918-1	1.5 - 2.5	2.2 - 3.0	CuSn, Tin
	1-962918-2			CuSn, Silver
	2-962918-1			CuFe, Tin
	2-962918-2			CuFe, Silver
	1-962919-1	A2 >2.5 - 4.0	2.7 - 3.7	CuSn, Tin
	1-962919-2			CuSn, Silver
	2-962919-1			CuFe, Tin
	2-962919-2			CuFe, Silver

NOTE

1. GENERAL TOLERANCE : ±0.3, ±3.0°
2. THE MATING CONNECTOR: 1897214-1
3. APPLICABLE TAB CONTACT P/N:TABLE 1.
4. APPLICABLE WIRE SEAL P/N:TABLE 2

PART NO.	DESCRIPTION	MATERIAL	COLOR
1897213-2	CAP HSG	PA66-GF15	BLACK

TABLE 2.

TAPE	PART NO.	INSULASION DIA. (mm)	COLOR
MCP6.3	963243-1	1.4 - 2.1	BLUE
	963244-1	2.2 - 3.0	WHITE
	963245-1	3.4 - 3.7	YELLOW
	100132-1	CAVITY PLUG	BLACK

THIS DRAWING IS A CONTROLLED DOCUMENT.

DIMENSIONS: mm

TOLERANCES UNLESS OTHERWISE SPECIFIED:
0 PLC ± –
1 PLC ± –
2 PLC ± –
3 PLC ± –
4 PLC ± –
ANGLES ± –

MATERIAL: SEE TABLE

FINISH: –

DWN: SH LEE –
CHK: YJ YOUN –
APVD: JK SONG –
PRODUCT SPEC: –
APPLICATION SPEC: 114-18052
WEIGHT: –

TE Connectivity

NAME: MCP 6.3 2P CAP HSG – –

SIZE	CAGE CODE	DRAWING NO	RESTRICTED TO
A3	00779	C-1897213	–

CUSTOMER DRAWING

SCALE 1:1 | SHEET 1 OF 1 | REV A2