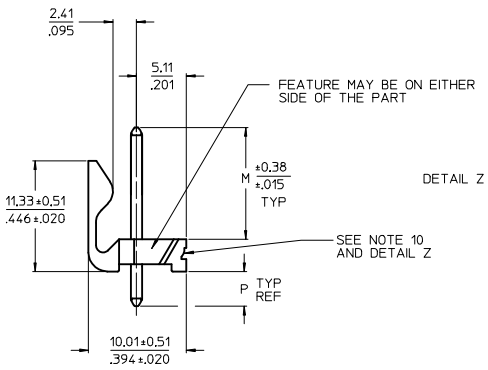

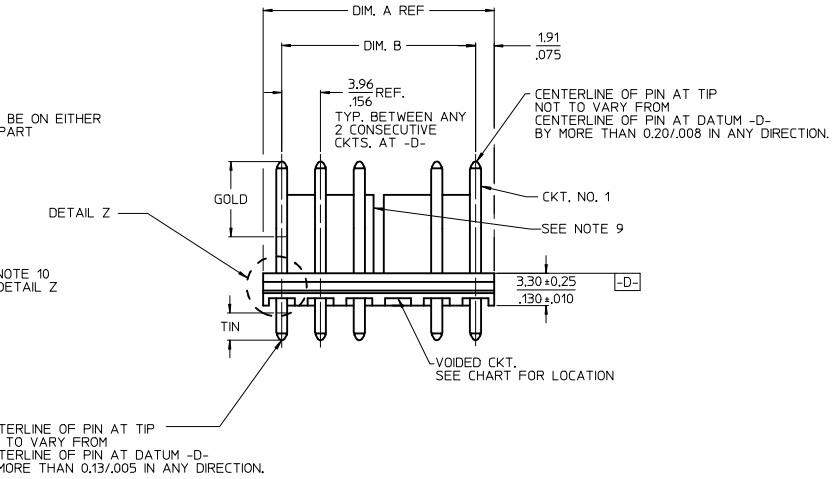

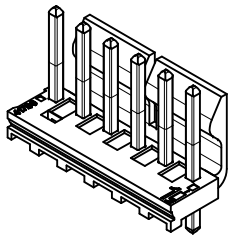

CKT	DIM. A	DIM. B	SLOT LOC BETWEEN CKTS
2	7.77 .306	3.96±0.05 .156±.002	NONE
3	11.73 .462	7.92±0.08 .312±.003	NONE
4	15.70 .618	11.89±0.08 .468±.003	NONE
5	19.66 .774	15.85±0.10 .624±.004	NONE
6	23.62 .930	19.81±0.10 .780±.004	3 & 4
7	27.58 1.086	23.77±0.10 .936±.004	4 & 5
8	31.55 1.242	27.74±0.13 1.092±.005	4 & 5
9	35.51 1.398	31.70±0.13 1.248±.005	5 & 6
10	39.47 1.554	35.66±0.13 1.404±.005	5 & 6
11	43.43 1.710	39.62±0.15 1.560±.006	6 & 7
12	47.40 1.866	43.59±0.15 1.716±.006	4 & 5 8 & 9
13	51.36 2.022	47.55±0.15 1.872±.006	4 & 5 9 & 10
14	55.32 2.178	51.51±0.18 2.028±.007	5 & 6 9 & 10
15	59.28 2.334	55.47±0.18 2.184±.007	5 & 6 10 & 11
16	63.25 2.490	59.44±0.18 2.340±.007	5 & 6 11 & 12
17	67.21 2.646	63.40±0.20 2.496±.008	6 & 7 11 & 12
18	71.17 2.802	67.36±0.20 2.652±.008	6 & 7 12 & 13

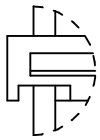

DETAIL Z
SCALE 4:1

NOTES:
1. MATERIAL: HEADER-GLASS FILLED POLYESTER, 94V-0, MOLDED NATURAL (WHITE).
2. FINISH:
   - (154-TIN) OVERALL TIN: 0.00254/.000100 MIN. OVER 0.00127/.000050 MIN NICKEL.
   - (197-TIN) OVERALL REFLOWED MATTE TIN: 0.00152/.000060 MIN. OVER 0.00127/.000050 MIN. NICKEL OVERALL.
   - (222-TIN) OVERALL MATTE TIN: 0.00254/.000100 MIN. OVER 0.00127/.000050 MIN NICKEL.
   - (208-15 GOLD) SELECT GOLD: 0.00038/.000015 MIN. SELECT TIN: 0.00254/.000100 MIN. OVERALL NICKEL UNDERPLATE: 0.00127/.000050 MIN.
   - (228-30 GOLD) SELECT GOLD: 0.00076/.000030 MIN. SELECT TIN: 0.00254/.000100 MIN. OVERALL NICKEL UNDERPLATE: 0.00127/.000050 MIN.
   - (241-20 GOLD) 0.00051/.000020 MIN. SELECT TIN: 0.00254/.000100 MIN. OVERALL NICKEL UNDERPLATE: 0.00127/.000050 MIN.
3. PRODUCT SPECIFICATION AND PROCESS PARAMETERS: SEE PS-08-50.
4. PACKAGING INFORMATION: SEE CHARTS.
5. SOLDERABILITY: PER SMES-152.
6. PIN PUSH-OUT FORCE: PRIOR TO SOLDERING, A 3 LB. MINIMUM FORCE (IN EITHER DIRECTION)
7. PARTS ARE STACKABLE END TO END ON 3.96/.156 CENTERS.
8. THIS PART CONFORMS TO CLASS B REQUIREMENTS OF COSMETIC SPECIFICATION PS-45499-002.
9. SLOTS ON BACKWALL ARE BETWEEN CIRCUITS, SEE CHART FOR LOCATION.
10 FEATURE MAY OR MAY NOT EXTEND ACROSS THE ENTIRE FACE OF THE PART "SEE DETAIL Z".

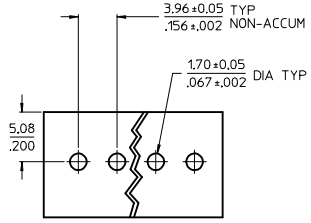

RECOMMENDED P.C.BOARD LAYOUT

SHT	REV
2-*	Q5
1	Q5

ADD 41791-1312
EC NO: UCP2014-3535
DRWN:MKIPPER 2014/02/25
CH'KD:NNGUYEN 2014/04/07
APPR:FSMITH 2014/07/28
DESCRIPTION
REV Q5

QUALITY SYMBOLS
F_A=0
F_C=0
F_P=0

GENERAL TOLERANCES (UNLESS SPECIFIED)

	mm	INCH
4 PLACES	± ---	± ---
3 PLACES	± ---	± .010
2 PLACES	± 0.25	± .015
1 PLACE	± 0.38	± ---
0 PLACE	±	±

ANGULAR ±1/2°
DRAFT WHERE APPLICABLE MUST REMAIN WITHIN DIMENSIONS

DIMENSION STYLE: MM/IN
SCALE: 2:1
DESIGN UNITS: INCH
THIRD ANGLE PROJECTION

		DATE
DRAWN BY	JSCHAFER	11-07-03
CHECKED BY	KSAMIEC	11-10-03
APPROVED BY	MARGULIS	11-17-03

MATERIAL NO.: SEE CHART

TITLE: KK 156 HEADER ASSEMBLY FRICTION LOCK VERTICAL SOLID BODY W/O PEGS

molex

DOCUMENT NO.: SDA-41791
SHEET NO.: 1 OF *
SIZE: B

THIS DRAWING CONTAINS INFORMATION THAT IS PROPRIETARY TO MOLEX INCORPORATED AND SHOULD NOT BE USED WITHOUT WRITTEN PERMISSION