MICRO SWITCH
a Honeywell Division
FED. MFG. CODE 91929

SWITCH - ENCLOSED

CATALOG LISTING
422EN133-RB
CUSTOMER PART NO.
1159SCAV457-1

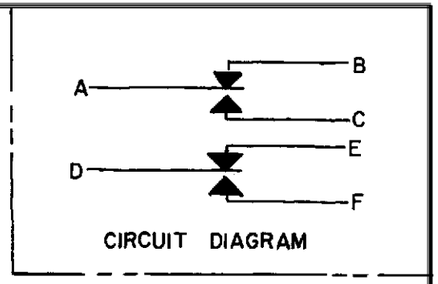

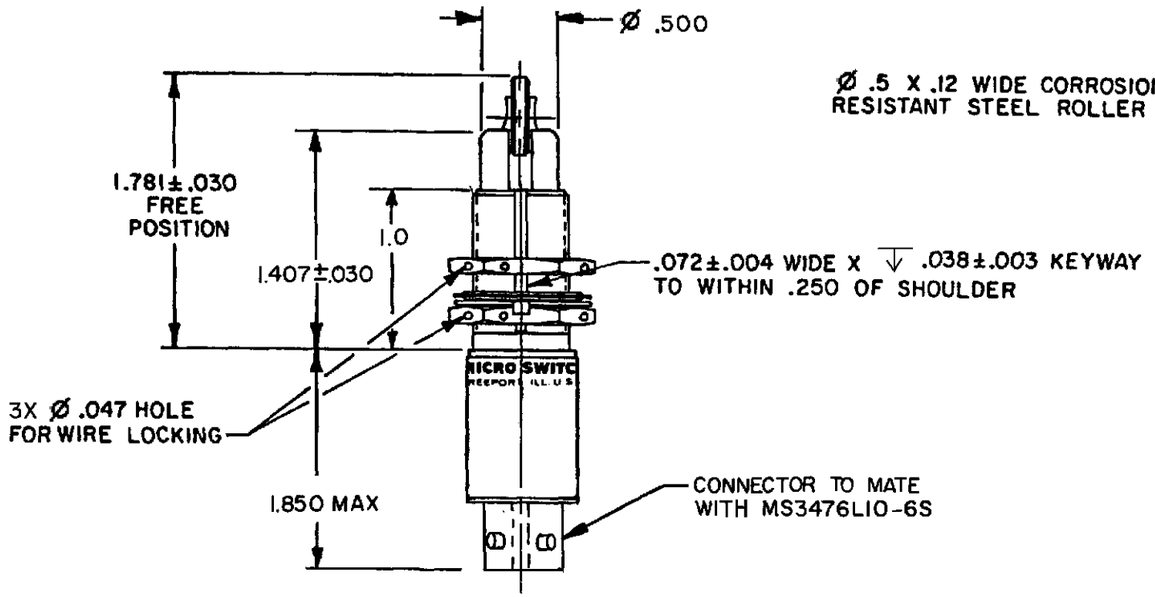

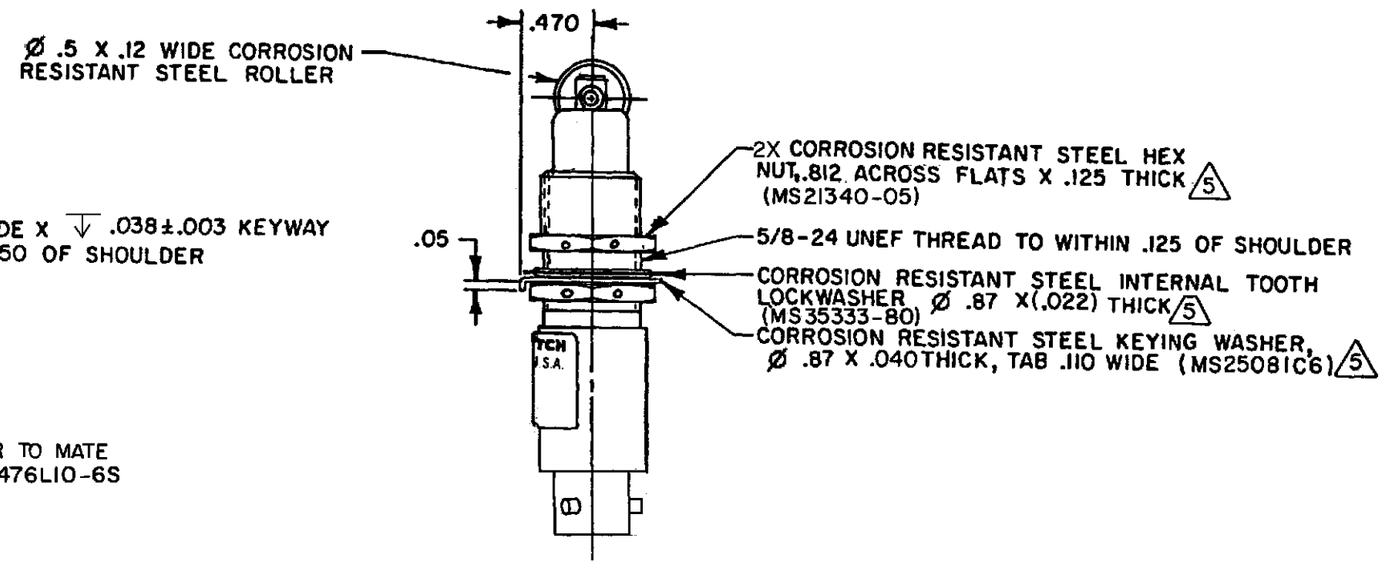

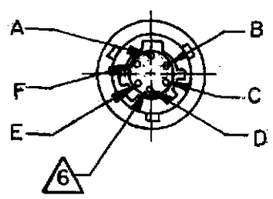

ANSI Y14.5M-1982 APPLIES

THIS DRAWING COVERS A PROPRIETARY ITEM AND IS THE PROPERTY OF MICRO SWITCH. A DIVISION OF HONEYWELL. THIS DRAWING IS NOT TO BE COPIED OR USED WITHOUT THE APPROVAL OF MICRO SWITCH

THIRD ANGLE PROJECTION

SCALE NONE

DO NOT SCALE PRINT

UNLESS OTHERWISE SPECIFIED TOLERANCES ARE

ONE PLACE	(.0)	±.030
TWO PLACE	(.00)	±.015
THREE PLACE	(.000)	±.005
ANGLES		±

WEIGHT

CHARACTERISTICS

OPERATING FORCE — — — — 6-12 LBS
FULL OVERTRAVEL FORCE — — — 30 LBS MAX
RELEASE FORCE — — — — 4 LBS MIN
PRETRAVEL — — — — — — .040 MAX
DIFFERENTIAL TRAVEL — — — .020 MAX
OVERTRAVEL — — — — — — .250 MIN

ELECTRICAL DATA

CONTACT ARRANGEMENT
2X SPDT

LOADS	28 VDC	
	SEA LEVEL	50,000 FT.
RES	7	7
IND	4	2.5

NOTES
1 - CORROSION RESISTANT STEEL ENCLOSURE
2 - SWITCH SEALED PER MIL-PRF-8805 SYMBOL 4
3 - COINCIDENCE OF OPERATION AND RELEASING POINTS: .010 OF PLUNGER TRAVEL
4 - IN ADDITION TO STANDARD MARKING, CUSTOMER PART NUMBER AND CURRENT CUSTOMER DRAWING REVISION LEVEL IS MARKED ON THE SWITCH NAME PLATE IF APPLICABLE
5 HARDWARE MAY BE PACKAGED UNASSEMBLED PER MIL-PRF-8805
6 INTERFACIAL SEAL

CATALOG LISTING 422EN133-RB
PAGE 1 OF 1
ISSUE M 8
RELEASE NO. PR-18262-T
REPLACES
CHECK
30APR09
CMH
CHECK
16 FEB 99
J A F
CHECK
16 FEB 99
G J W
DRAWN
RASTER

REVISIONS
A OBS DWG 93988 LLB 18 JAN 99
B REINST PR-23845 GJW 16 FEB 99
C ECO 0051697 MBN 30APR09

Mouser Electronics

Authorized Distributor

Click to View Pricing, Inventory, Delivery & Lifecycle Information:

Honeywell:
422EN133-RB