40V NPN SMALL SIGNAL TRANSISTOR IN SOT323

Features

- BV_{CEO} > 40V
- I_C = 600mA Collector Current
- Epitaxial Planar Die Construction
- Ultra-Small Surface Mount Package
- Complementary PNP Type: MMST2907A
- **Totally Lead-Free & Fully RoHS Compliant (Notes 1 & 2)**
- **Halogen and Antimony Free. "Green" Device (Note 3)**
- **Qualified to AEC-Q101 Standards for High Reliability**

Mechanical Data

- Case: SOT323
- Case Material: Molded Plastic. "Green" Molding Compound; UL Flammability Rating 94V-0
- Moisture Sensitivity: Level 1 per J-STD-020
- Terminals: Finish - Matte Tin Plated Leads, Solderable per MIL-STD-202, Method 208 e3
- Weight: 0.006 grams (Approximate)

SOT323

Top View

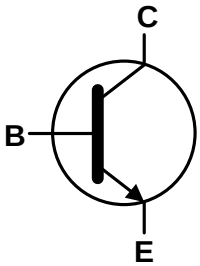

Device Symbol

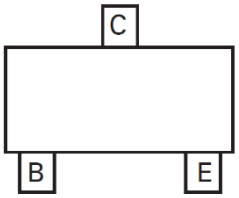

Pin-Out Top View

Ordering Information (Note 4)

Product	Status	Compliance	Marking	Reel size (inches)	Tape width (mm)	Quantity per reel
MMST2222A-7-F	Active	AEC-Q101	K3P	7	8	3,000

Notes:
1. No purposely added lead. Fully EU Directive 2002/95/EC (RoHS) & 2011/65/EU (RoHS 2) compliant.
2. See http://www.diodes.com/quality/lead_free.html for more information about Diodes Incorporated's definitions of Halogen- and Antimony-free, "Green" and Lead-free.
3. Halogen- and Antimony-free "Green" products are defined as those which contain <900ppm bromine, <900ppm chlorine (<1500ppm total Br + Cl) and <1000ppm antimony compounds.
4. For packaging details, go to our website at http://www.diodes.com/products/packages.html.

Marking Information

SOT323

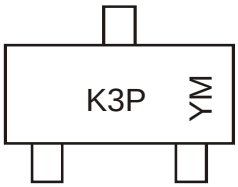

K3P = Product Type Marking Code
YM = Date Code Marking
Y or $\overline{Y}$ = Year (ex: D = 2016)
M or $\overline{M}$ = Month (ex: 9 = September)

Date Code Key

Year	2016	2017	2018	2019	2020	2021	2022	2023	2024	2025	2026
Code	D	E	F	G	H	I	J	K	L	M	N

Month	Jan	Feb	Mar	Apr	May	Jun	Jul	Aug	Sep	Oct	Nov	Dec
Code	1	2	3	4	5	6	7	8	9	O	N	D

© Diodes Incorporated

Absolute Maximum Ratings (@T_A = +25°C, unless otherwise specified.)

Characteristic	Symbol	Value	Unit
Collector-Base Voltage	V_{CBO}	75	V
Collector-Emitter Voltage	V_{CEO}	40	V
Emitter-Base Voltage	V_{EBO}	6	V
Collector Current	I_C	600	mA

Thermal Characteristics (@T_A = +25°C, unless otherwise specified.)

Characteristic	Symbol	Value	Unit
Power Dissipation (Note 5)	P_D	200	mW
Thermal Resistance, Junction to Ambient (Note 5)	$R_{\theta JA}$	625	°C/W
Operating and Storage Temperature Range	T_J, T_{STG}	-55 to +150	°C

ESD Ratings (Note 6)

Characteristic	Symbol	Value	Unit	JEDEC Class
Electrostatic Discharge - Human Body Model	ESD HBM	4,000	V	3A
Electrostatic Discharge - Machine Model	ESD MM	400	V	C

Electrical Characteristics (@T_A = +25°C, unless otherwise specified.)

Characteristic	Symbol	Min	Max	Unit	Test Condition
OFF CHARACTERISTICS (Note 7)					
Collector-Base Breakdown Voltage	BV_{CBO}	75	—	V	I_C = 10μA, I_E = 0
Collector-Emitter Breakdown Voltage	BV_{CEO}	40	—	V	I_C = 10mA, I_B = 0
Emitter-Base Breakdown Voltage	BV_{EBO}	6.0	—	V	I_E = 10μA, I_C = 0
Collector Cut-Off Current	I_{CBO}	—	10	nA μA	V_{CB} = 60V, I_E = 0 V_{CB} = 60V, I_E = 0, T_A = +150°C
Collector Cut-Off Current	I_{CEX}	—	10	nA	V_{CE} = 60V, $V_{EB(OFF)}$ = 3V
Base Cutoff Current	I_{BL}	—	20	nA	V_{CE} = 60V, $V_{EB(OFF)}$ = 3V
ON CHARACTERISTICS (Note 7)					
DC Current Gain	h_{FE}	35 50 75 100 40 50 35	— — — 300 — — —	—	I_C = 100μA, V_{CE} = 10V I_C = 1.0mA, V_{CE} = 10V I_C = 10mA, V_{CE} = 10V I_C = 150mA, V_{CE} = 10V I_C = 500mA, V_{CE} = 10V I_C = 10mA, V_{CE} = 10V, T_A = -55°C I_C = 150mA, V_{CE} = 1.0V
Collector-Emitter Saturation Voltage	$V_{CE(SAT)}$	—	0.3 1.0	V	I_C = 150mA, I_B = 15mA I_C = 500mA, I_B = 50mA
Base-Emitter Saturation Voltage	$V_{BE(SAT)}$	0.6 —	1.2 2.0	V	I_C = 150mA, I_B = 15mA I_C = 500mA, I_B = 50mA
SMALL SIGNAL CHARACTERISTICS					
Output Capacitance	C_{obo}	—	8	pF	V_{CB} = 10V, f = 1.0MHz, I_E = 0
Input Capacitance	C_{ibo}	—	25	pF	V_{EB} = 0.5V, f = 1.0MHz, I_C = 0
Current Gain-Bandwidth Product	f_T	300	—	MHz	V_{CE} = 20V, I_C = 20mA, f = 1.0MHz
Noise Figure	NF	—	4.0	dB	V_{CE} = 10V, I_C = 100μA, R_S = 1kΩ, f = 1.0kHz
SWITCHING CHARACTERISTICS					
Delay Time	t_d	—	10	ns	V_{CC} = 30V, I_C = 150mA, $V_{BE(OFF)}$ = -0.5V, I_{B1} = 15mA
Rise Time	t_r	—	25	ns	
Storage Time	t_s	—	225	ns	V_{CC} = 30V, I_C = 150mA, I_{B1} = I_{B2} = 15mA
Fall Time	t_f	—	60	ns	

Notes:
5. For a device mounted with the collector lead on minimum recommended pad layout 1oz copper that is on a single-sided 1.6mm FR-4 PCB; device is measured under still air conditions whilst operating in a steady-state.
6. Refer to JEDEC specification JESD22-A114 and JESD22-A115.
7. Measured under pulsed conditions. Pulse width ≤ 300μs. Duty cycle ≤ 2%.

© Diodes Incorporated

Typical Electrical Characteristics (@T_A = +25°C, unless otherwise specified.)

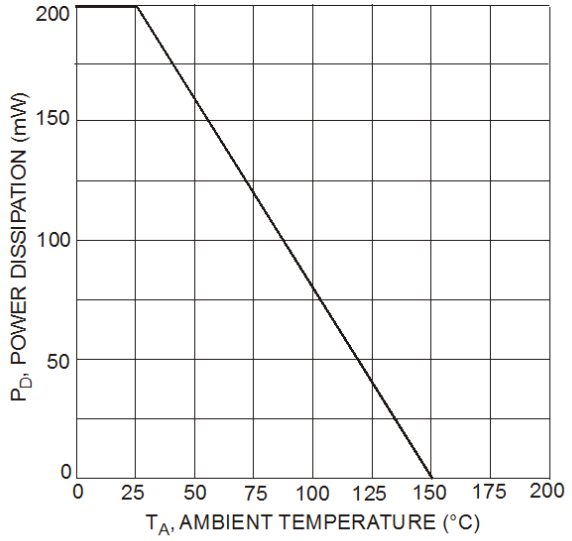

Max Power Dissipation vs. Ambient Temperature

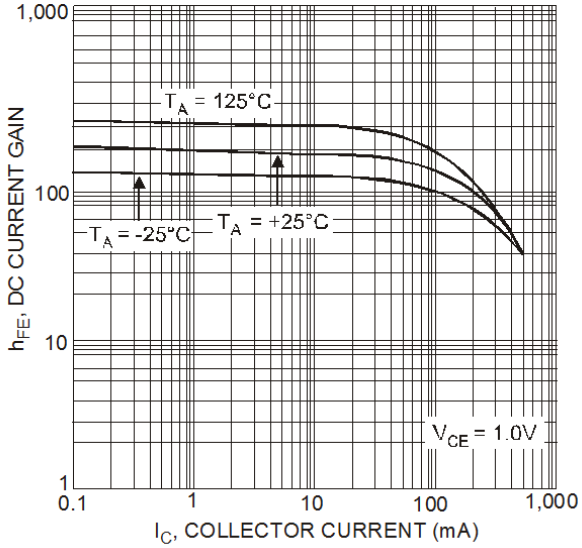

Typical DC Current Gain vs.Collector Current

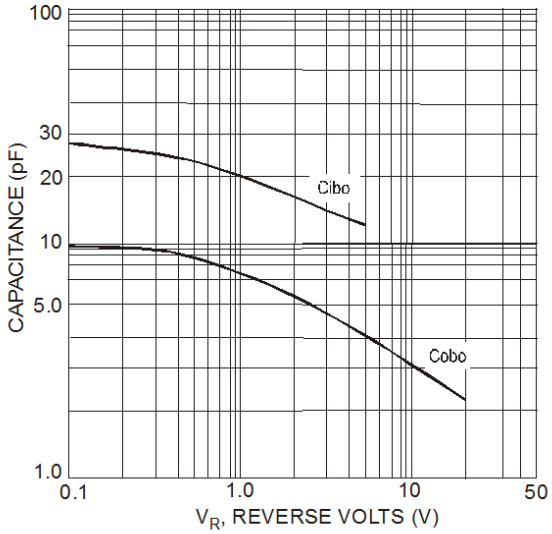

Typical Capacitance Characteristics

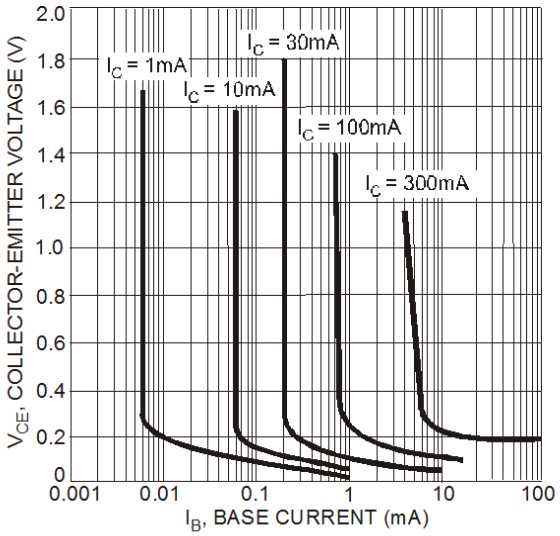

Typical Collector Saturation Region

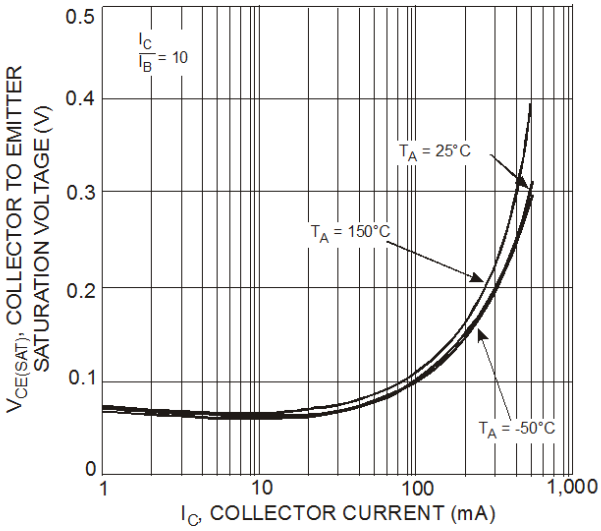

Collector-Emitter Saturation Voltage vs. Collector Current

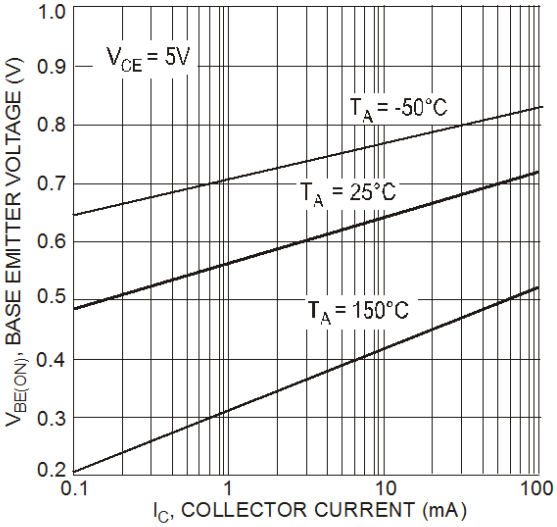

Base-Emitter Voltage vs. Collector Current

© Diodes Incorporated

Typical Electrical Characteristics (Cont. @T_A = +25°C, unless otherwise specified.)

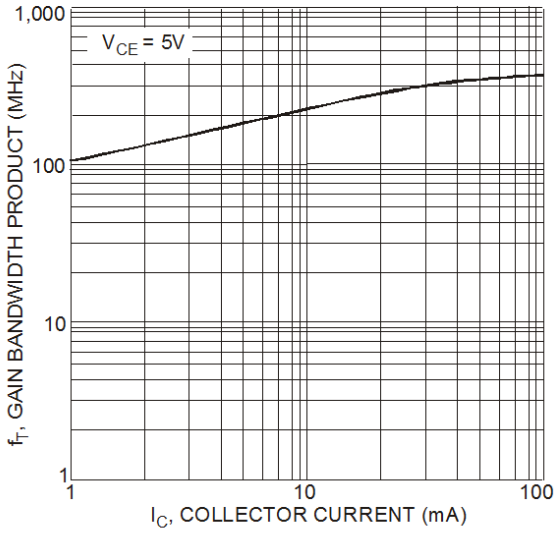

Gain Bandwidth Product vs. Collector Current

© Diodes Incorporated

Package Outline Dimensions

Please see http://www.diodes.com/package-outlines.html for the latest version.

SOT323

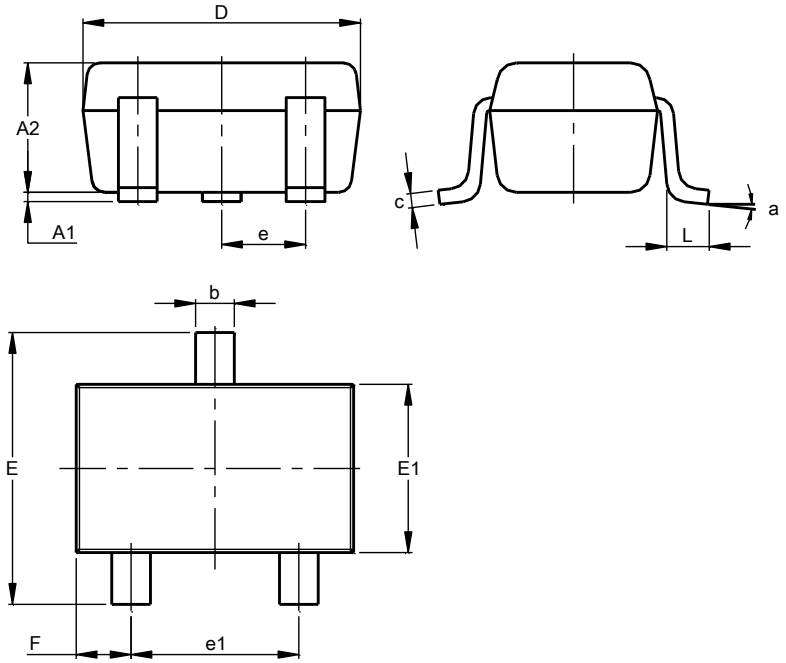

SOT323			
Dim	**Min**	**Max**	**Typ**
A1	0.00	0.10	0.05
A2	0.90	1.00	0.95
b	0.25	0.40	0.30
c	0.10	0.18	0.11
D	1.80	2.20	2.15
E	2.00	2.20	2.10
E1	1.15	1.35	1.30
e	0.650 BSC		
e1	1.20	1.40	1.30
F	0.375	0.475	0.425
L	0.25	0.40	0.30
a	0°	8°	--
All Dimensions in mm			

Suggested Pad Layout

Please see http://www.diodes.com/package-outlines.html for the latest version.

SOT323

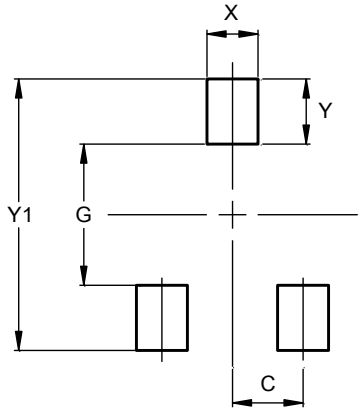

Dimensions	Value (in mm)
C	0.650
G	1.300
X	0.470
Y	0.600
Y1	2.500

© Diodes Incorporated

IMPORTANT NOTICE

DIODES INCORPORATED MAKES NO WARRANTY OF ANY KIND, EXPRESS OR IMPLIED, WITH REGARDS TO THIS DOCUMENT, INCLUDING, BUT NOT LIMITED TO, THE IMPLIED WARRANTIES OF MERCHANTABILITY AND FITNESS FOR A PARTICULAR PURPOSE (AND THEIR EQUIVALENTS UNDER THE LAWS OF ANY JURISDICTION).

Diodes Incorporated and its subsidiaries reserve the right to make modifications, enhancements, improvements, corrections or other changes without further notice to this document and any product described herein. Diodes Incorporated does not assume any liability arising out of the application or use of this document or any product described herein; neither does Diodes Incorporated convey any license under its patent or trademark rights, nor the rights of others. Any Customer or user of this document or products described herein in such applications shall assume all risks of such use and will agree to hold Diodes Incorporated and all the companies whose products are represented on Diodes Incorporated website, harmless against all damages.

Diodes Incorporated does not warrant or accept any liability whatsoever in respect of any products purchased through unauthorized sales channel. Should Customers purchase or use Diodes Incorporated products for any unintended or unauthorized application, Customers shall indemnify and hold Diodes Incorporated and its representatives harmless against all claims, damages, expenses, and attorney fees arising out of, directly or indirectly, any claim of personal injury or death associated with such unintended or unauthorized application.

Products described herein may be covered by one or more United States, international or foreign patents pending. Product names and markings noted herein may also be covered by one or more United States, international or foreign trademarks.

This document is written in English but may be translated into multiple languages for reference. Only the English version of this document is the final and determinative format released by Diodes Incorporated.

LIFE SUPPORT

Diodes Incorporated products are specifically not authorized for use as critical components in life support devices or systems without the express written approval of the Chief Executive Officer of Diodes Incorporated. As used herein:

A. Life support devices or systems are devices or systems which:

1. are intended to implant into the body, or
2. support or sustain life and whose failure to perform when properly used in accordance with instructions for use provided in the labeling can be reasonably expected to result in significant injury to the user.

B. A critical component is any component in a life support device or system whose failure to perform can be reasonably expected to cause the failure of the life support device or to affect its safety or effectiveness.

Customers represent that they have all necessary expertise in the safety and regulatory ramifications of their life support devices or systems, and acknowledge and agree that they are solely responsible for all legal, regulatory and safety-related requirements concerning their products and any use of Diodes Incorporated products in such safety-critical, life support devices or systems, notwithstanding any devices- or systems-related information or support that may be provided by Diodes Incorporated. Further, Customers must fully indemnify Diodes Incorporated and its representatives against any damages arising out of the use of Diodes Incorporated products in such safety-critical, life support devices or systems.

Copyright © 2016, Diodes Incorporated

www.diodes.com