VICOR CONFIDENTIAL

THIS DOCUMENT AND THE DATA DISCLOSED HEREIN OR HEREWITH IS NOT TO BE REPRODUCED, USED OR DISCLOSED IN WHOLE OR IN PART TO ANYONE WITHOUT THE PERMISSION OF VICOR CORP.

REV.	DESCRIPTION		DATE	APPROVED
1	RELEASED PER E050349	PEI	11/15/05	ECF
2	REVISED PER E100622	GCK	04/28/10	REJH
3	REVISED PER E100872	KUK	06/30/10	DCS
4	REVISED PER E120629	ZMB	07/02/12	SJ
5	REVISED PER E120794	SJ	08/30/12	REJH

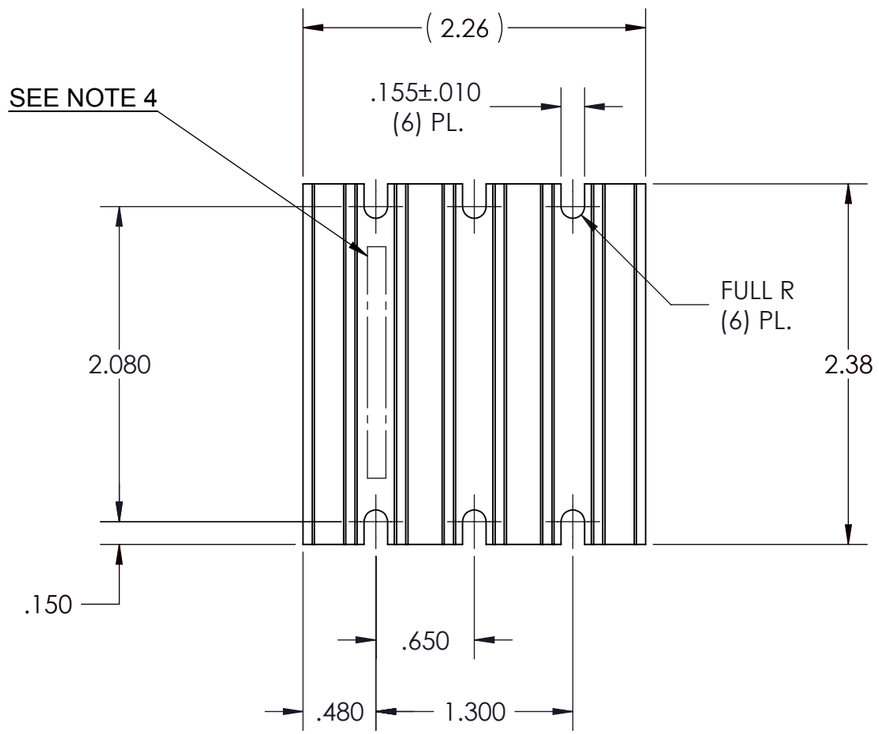

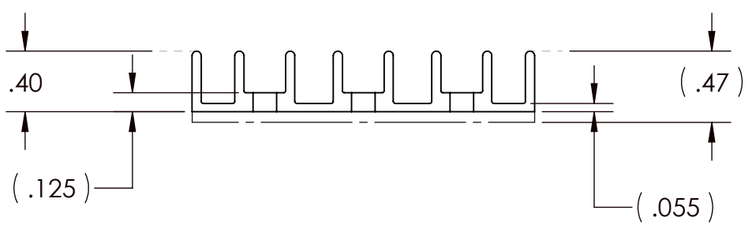

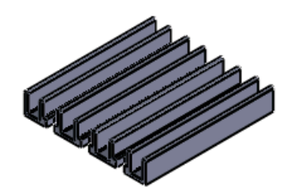

NOTES
1. MATERIAL: EXTRUSION SEE SHEET 2 OF 2
2. CLEAR FINISH, RoHS COMPLIANT PER CST-0001, LATEST REVISION PER A.) CHROMIUM FREE, OR B.) TRIVALENT CHROMIUM IN ACCORDANCE WITH MIL-DTL-5541, TYPE II, CLASS 1A OR 3. SEE CST-0003 FOR TYPES OF AVAILABLE FINISHES.
<> 3. REMOVE ALL LOOSE BURRS.
4. MECHANICALLY STAMP PART NUMBER AND REVISION IN AREA SHOWN.
5. <> DENOTES CRITICAL CHARACTERISTIC FOR LOT INSPECTION.
6. DIMENSIONS ARE INCHES ONLY.

DRAWN BY	DATE
P.E.IENI	05/24/05

UNLESS OTHERWISE SPECIFIED DIMENSIONS ARE : INCH / [MM]

TOLERANCES ARE:
DECIMALS
X.XX [X.X] = ±0.01 [0.25]
X.XXX [X.XX] = ±0.005 [0.127]
ANGLES ±1°

THIRD ANGLE PROJECTION

DO NOT SCALE DRAWING

VICOR SWD

HEATSINK XFLOW MINI-MOD .40 HG

SIZE	CAGE CODE	DWG NO	REV
B	67131	30140	5

SCALE 1:1 SHEET 1 OF 2

VICOR CONFIDENTIAL

THIS DOCUMENT AND THE DATA DISCLOSED HEREIN OR HEREWITH IS NOT TO BE REPRODUCED, USED OR DISCLOSED IN WHOLE OR IN PART TO ANYONE WITHOUT THE PERMISSION OF VICOR CORP.

REVISIONS

REV	DESCRIPTION	DATE	APPROVED
	SEE SHEET 1		

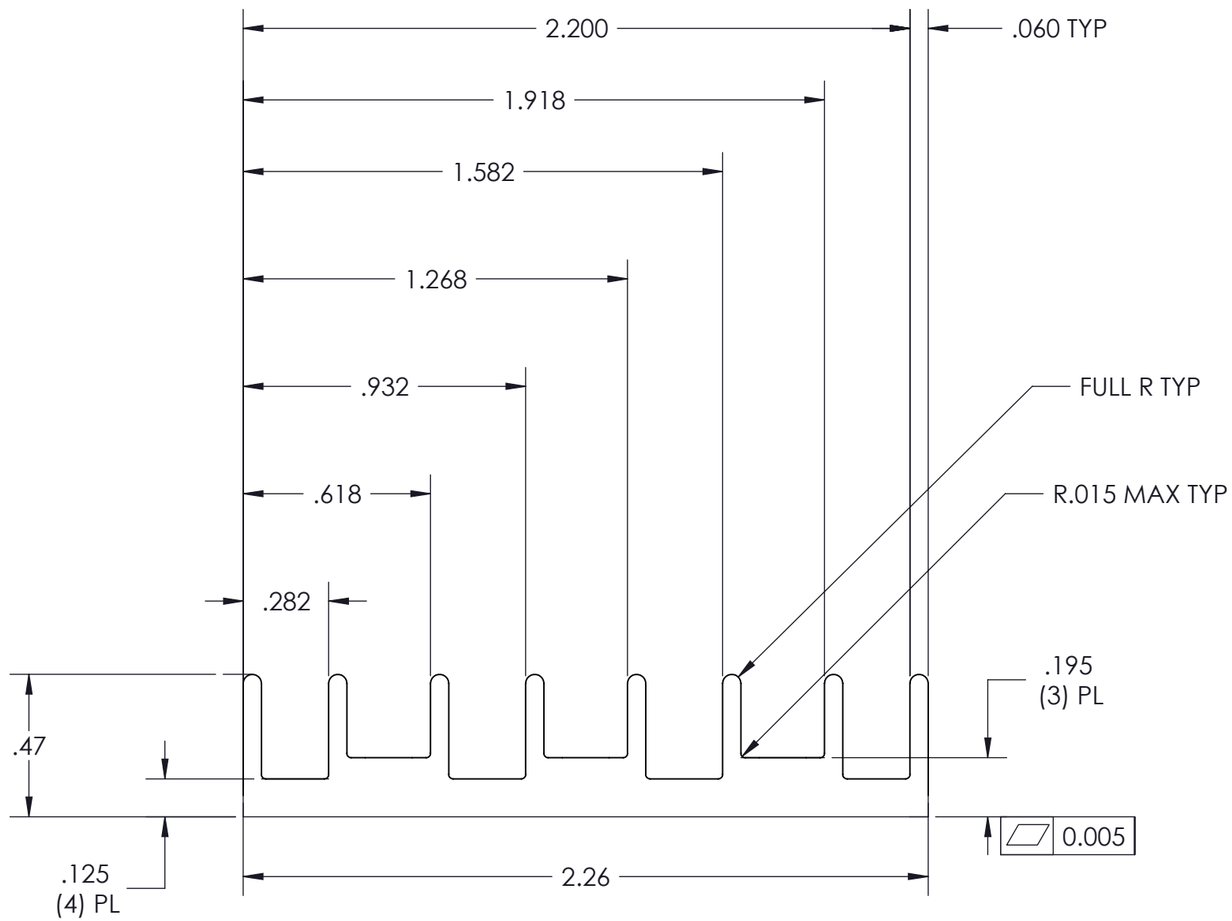

PROFILE COMMON FOR
30140

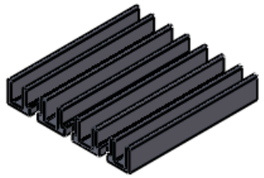

NOTES:
1. MATERIAL ALUMINIUM: 6063-T5
2. BREAK ALL EDGES AND SHARP CORNERS.
3. RoHS COMPLIANT PER CST-0001 LATEST REVISION.
4. DIMENSIONS ARE INCHES ONLY.

DRAWN BY	DATE
P.E.IENI	05/24/05

UNLESS OTHERWISE SPECIFIED DIMENSIONS ARE : INCH / [MM]

TOLERANCES ARE:
DECIMALS
X.XX [X.X] = ±0.01 [0.25]
X.XXX [X.XX] = ±0.005 [0.127]
ANGLES ±1°

THIRD ANGLE PROJECTION

DO NOT SCALE DRAWING

VICOR

SWD

HEATSINK XFLOW MINI-MOD .40 HG

SIZE	CAGE CODE	DWG NO	REV
B	67131	30140	5

SCALE 2:1

SHEET 2 OF 2