THIS DRAWING IS UNPUBLISHED. RELEASED FOR PUBLICATION -,- .
© COPYRIGHT - By - ALL RIGHTS RESERVED.

LOC	DIST
J	—

REVISIONS 変更

P	LTR	DESCRIPTION	DATE	DWN	APVD
	E1	REDRAWN W/CHANGE ECR-12-021403	13DEC2012	TS	KB

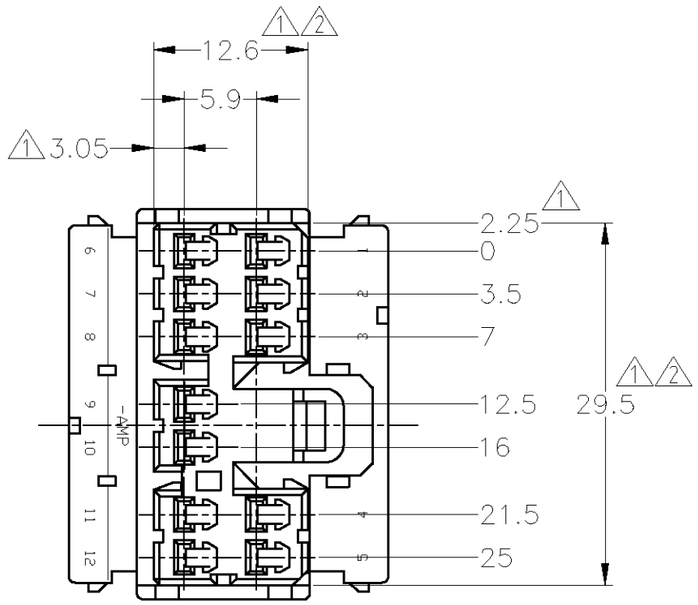

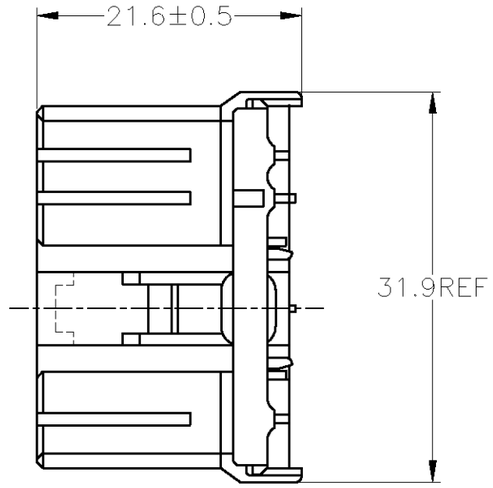

1. MUST BE KEPT BETWEEN -A- AND 2
2. TO BE MATED WITH THE CAP HOUSING SMOOTHLY
3. APPLIED CONTACT PART NUMBER; 173630 AND 173631

1. -A- 面より2mmの範囲で測定
2. 相手ハウジングと所定の機能を満足して嵌合できること
3. 内装するリセプタクルコンタクト型番173630 及び 173631

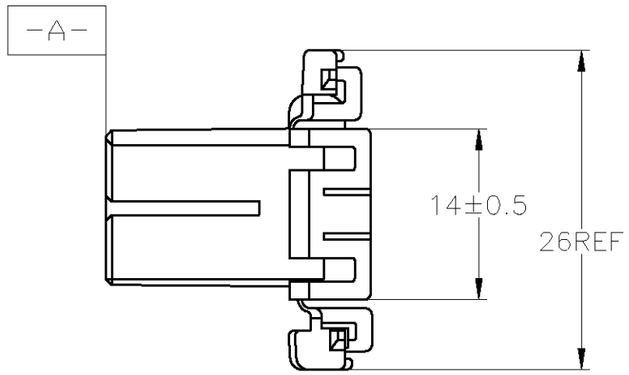

使用材料難燃グレード (FLAMMABILITY OF MATERIAL)	色 (COLOR)	型番 (PART NUMBER)
V-2	自然色 (NATURAL)	1-173851-1
HB	オレンジ (ORANGE)	173851-8
	灰 (GRAY)	173851-6
	青 (BLUE)	173851-5
	緑 (GREEN)	173851-4
	黒 (BLACK)	173851-2
	自然色 (NATURAL)	173851-1

THIS DRAWING IS A CONTROLLED DOCUMENT.

DIMENSIONS: 単位：粍 mm

TOLERANCES UNLESS OTHERWISE SPECIFIED: 一般公差
0 PLC ±-
1 PLC ±-
2 PLC ±-
3 PLC ±-
4 PLC ±-
ANGLES ±-

MATERIAL 材料: PBT

FINISH 仕上: -

TOLERANCES UNLESS OTHERWISE SPECIFIED: 一般公差
10≧ : ±0.2
30≧ >10 : ±0.25
100≧ >30 : ±0.3
ANGLE : ±3°

DWN T.SHINOHARA 13DEC2012
CHK K.BETSUI 13DEC2012
APVD K.BUTSUI 13DEC2012
PRODUCT SPEC 製品規格 108-5216,5264
APPLICATION SPEC 取付適用規格 —
WEIGHT —

TE Connectivity

NAME 名称: 070 SERIES MULTI-LOCK CONNECTOR 12POSITION PLUG HOUSING

SIZE	CAGE CODE	DRAWING NO 番号	RESTRICTED TO
A3	00779	C-173851	—

CUSTOMER DRAWING

SCALE 尺度 2:1 | SHEET 1 OF 1 | REV E1