THIS DRAWING IS UNPUBLISHED. RELEASED FOR PUBLICATION -,- .
© COPYRIGHT 2011 BY TYCO ELECTRONICS CORPORATION. ALL RIGHTS RESERVED.

LOC	DIST
DW	—

REVISIONS

P	LTR	DESCRIPTION	DATE	DWN	APVD
	N1	REVISED (ECR-11-016251, ECR-11-024125) GOLD FLASH RANGE ON SOLDERING AREA	09MAR'12	E.L.	W.K.

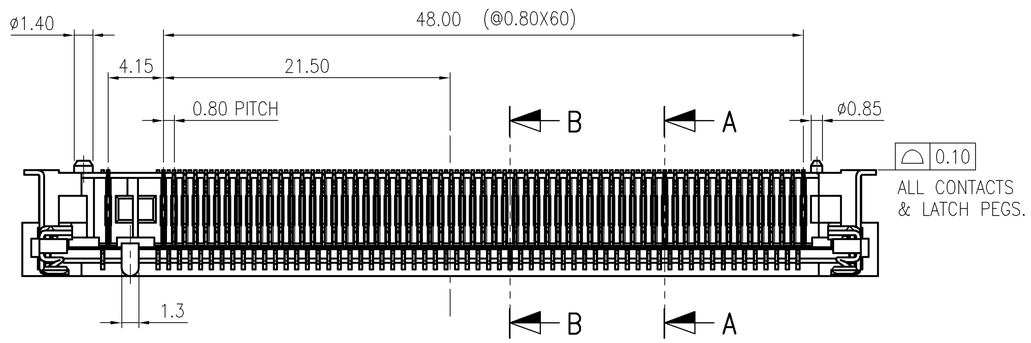

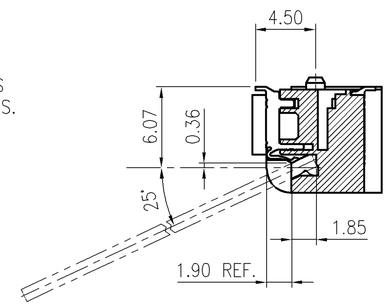

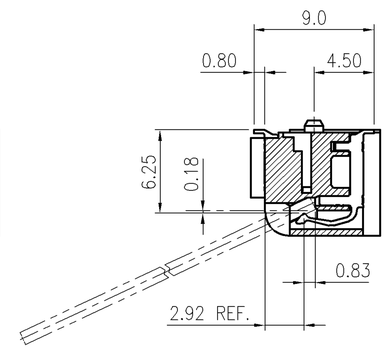

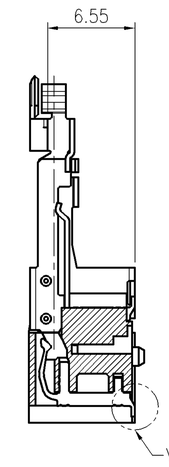

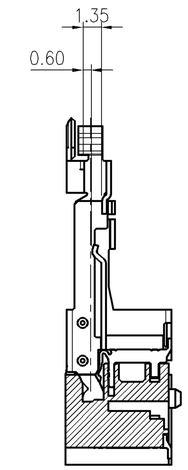

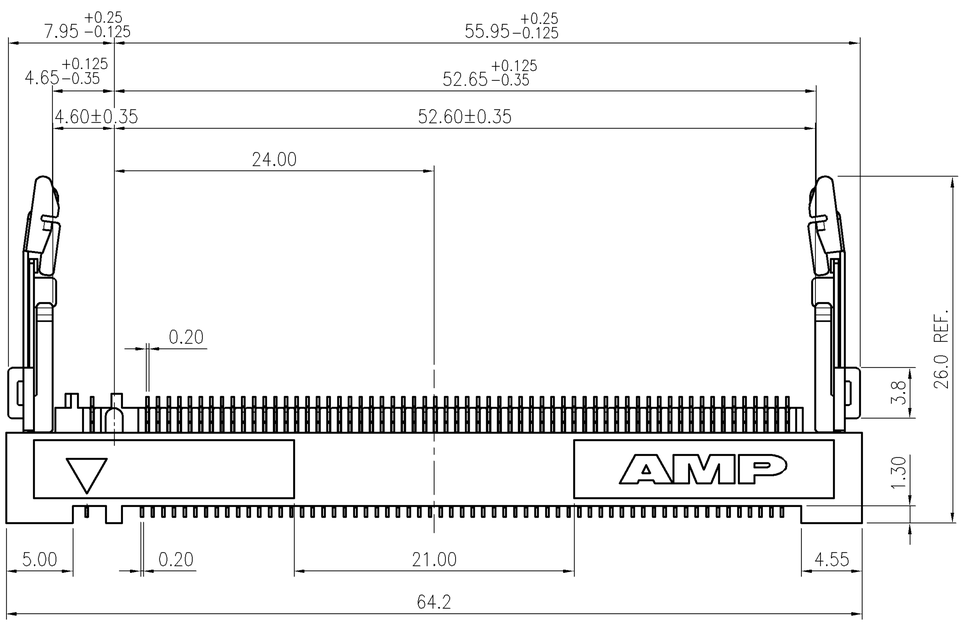

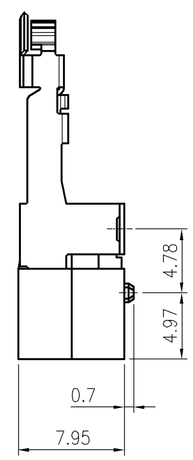

NOTE :

1. MATERIAL
   HOUSING : THERMOPLASTIC, LCP
   UL 94V-0, BLACK COLOR
   CONTACT : COPPER ALLOY
   LATCH : STEEL
2. FINISH
   CONTACT : 0.25um MIN. GOLD PLATED IN CONTACT AREA,
   GOLD FLASH PALTING ON SOLDER TAIL AREA, WITH
   1.27um MIN. NICKEL UNDERPLATING ALL OVER.
   LATCH : 2.54um MIN. MATTE TIN PLATING(SEE TABLE) OVER
   0.76um MIN. NICKEL PLATING.
3. CARD THICKNESS APPLIES ACROSS TABS AND INCLUDES PLATING AND/OR METALIZATION
4. APPLICATION
   GOLD CONTACT PAD : ELECTROLESS GOLD PLATING 0.05um MIN
   OVER ELECTROLESS NICKEL PLATING 2um MIN
5. BORDER OF COMPONENT AREA
6. WEIGHT
   NET WEIGHT : 3.50 kgs/CTN
   GROSS WEIGHT : 6.2 kgs/CTN

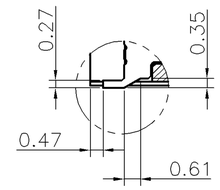

VIEW A
SCALE 2:1

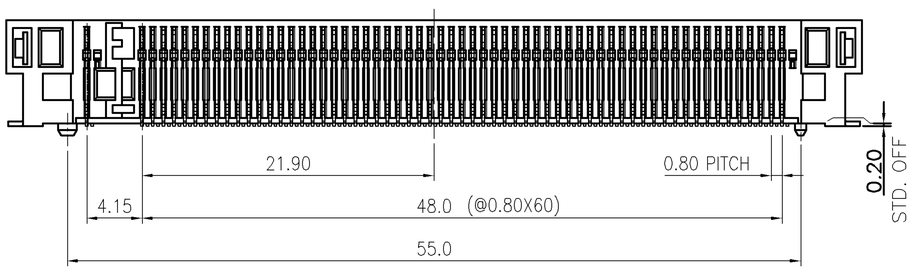

OBSOLETE	~~W/O~~	~~WHITE~~	~~440360-4~~
	W/O	TRANSPARENT	440360-2
	HOLE	TRAY COLOR	PART NUMBER

THIS DRAWING IS A CONTROLLED DOCUMENT.

DIMENSIONS: mm

TOLERANCES UNLESS OTHERWISE SPECIFIED:

0 PLC	± –
1 PLC	± 0.15
2 PLC	± 0.1
3 PLC	± 0.05
4 PLC	± –
ANGLES	± 3°

MATERIAL: SEE NOTE

FINISH: SEE NOTE

DWN S. HOU 11MAR2008
CHK W. KODAMA 11MAR2008
APVD W. KODAMA 11MAR2008
PRODUCT SPEC 108-57083
APPLICATION SPEC —
WEIGHT 5.75 GRAMS

TE Connectivity

NAME: 0.8mm PITCH FAX MODEM SOCKET, 124 POSITIONS

SIZE	CAGE CODE	DRAWING NO	RESTRICTED TO
A3	00779	C-440360	—

CUSTOMER DRAWING | SCALE — | SHEET 1 OF 7 | REV N1

THIS DRAWING IS UNPUBLISHED. RELEASED FOR PUBLICATION -,- .
© COPYRIGHT 2011 BY TYCO ELECTRONICS CORPORATION. ALL RIGHTS RESERVED.

LOC	DIST
DW	—

REVISIONS

P	LTR	DESCRIPTION	DATE	DWN	APVD
		SEE SHEET 1.			

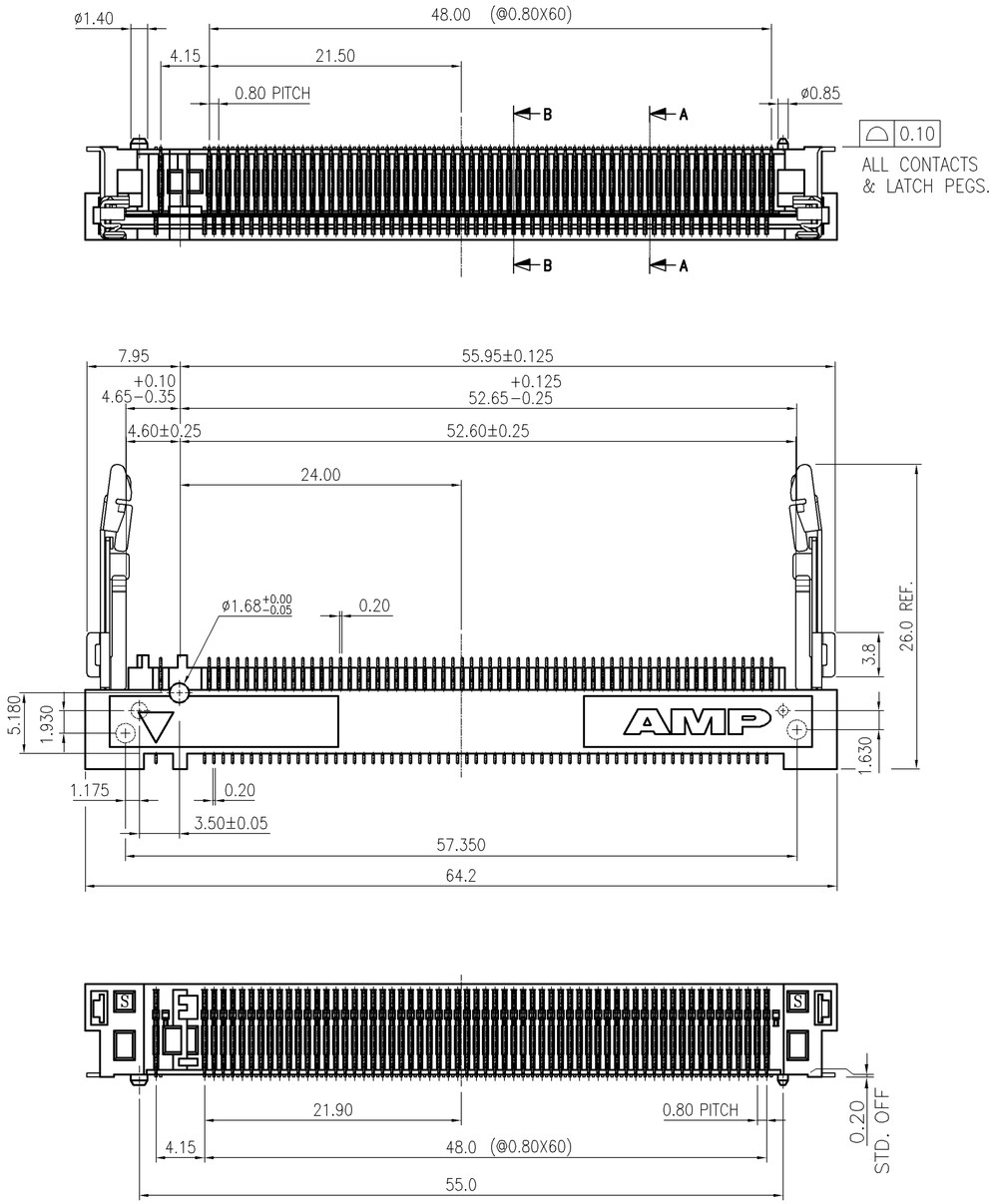

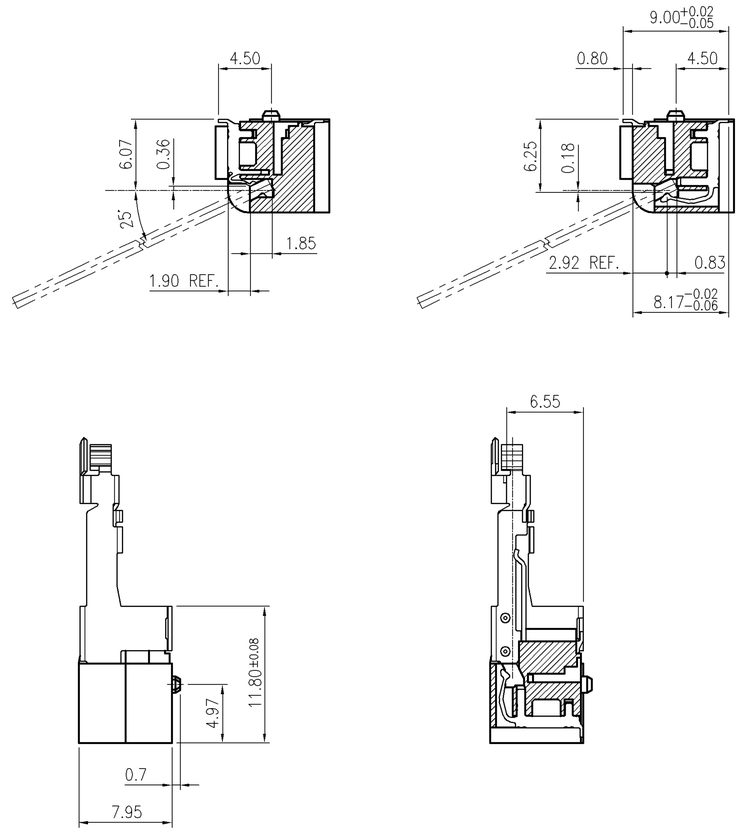

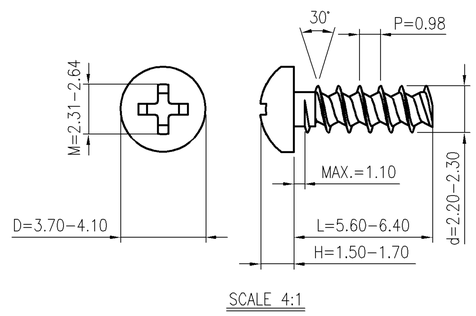

NOTE:
7 SCREW LOCATION AS APPLICABLE PER CUSTOMER.
8 RECOMMENDED SCREW :
M2.2 X 6, PT 30 OR EQUIVALENT SCREW FOR THERMOPLASTIC.
9 TORQUE SCREWS TO 38-48 OZF-IN.

OBSOLETE	W/	~~WHITE~~	~~1-440360-4~~
		~~TRANSPARENT~~	~~1-440360-2~~
	HOLE	TRAY COLOR	PART NUMBER

THIS DRAWING IS A CONTROLLED DOCUMENT.

DIMENSIONS: mm

TOLERANCES UNLESS OTHERWISE SPECIFIED:

0 PLC	± –
1 PLC	± 0.15
2 PLC	± 0.1
3 PLC	± 0.05
4 PLC	± –
ANGLES	± 3°

MATERIAL –

FINISH –

DWN –
CHK –
APVD –
PRODUCT SPEC –
APPLICATION SPEC –
WEIGHT –

CUSTOMER DRAWING

TE Connectivity

NAME
0.8mm PITCH FAX MODEM SOCKET, 124 POSITIONS

SIZE	CAGE CODE	DRAWING NO	RESTRICTED TO
A3	00779	C-440360	—

SCALE — SHEET 2 OF 7 REV N1

THIS DRAWING IS UNPUBLISHED. RELEASED FOR PUBLICATION -,- .
© COPYRIGHT 2011 BY TYCO ELECTRONICS CORPORATION. ALL RIGHTS RESERVED.

LOC	DIST
DW	—

REVISIONS

P	LTR	DESCRIPTION	DATE	DWN	APVD
		SEE SHEET 1.			

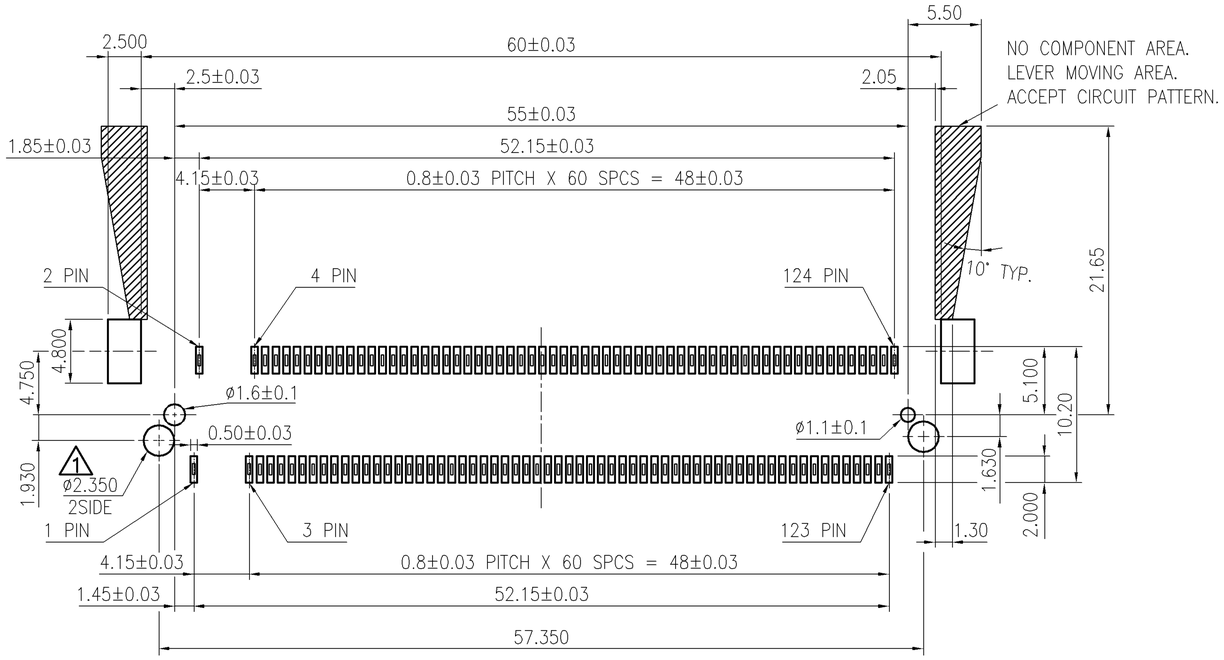

RECOMMENDED P.D. BOARD PATTERN LAYOUT

(CONNECTOR MOUNTING SIDE)

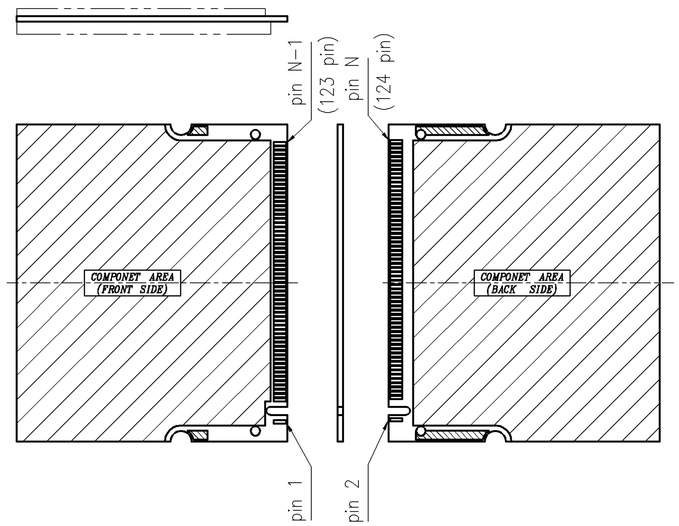

CIRCUT POSITION OF S.O.DIMM

NOTE:
1 THE HOLES ARE ONLY FOR P/N : 1-0440360-X.

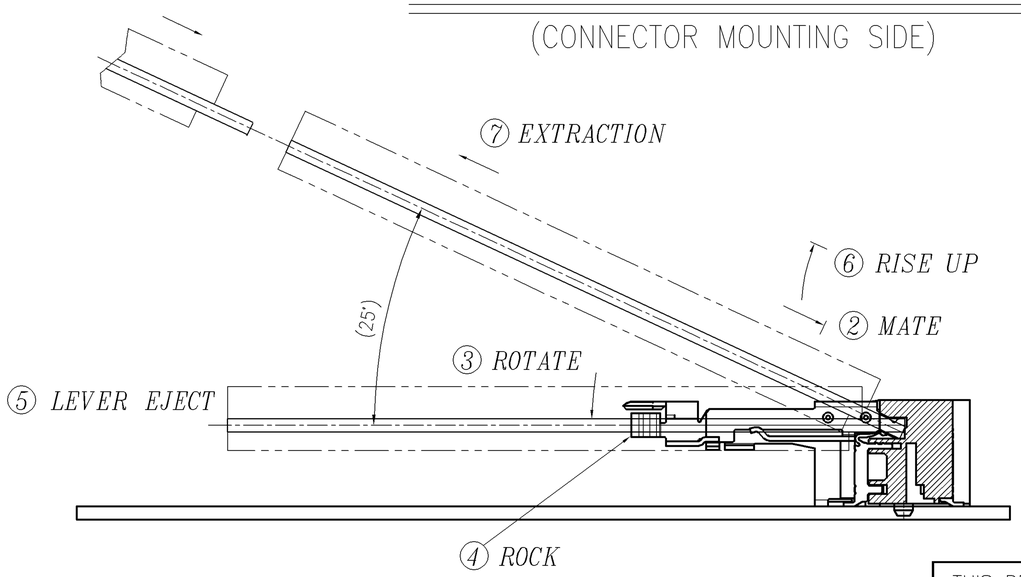

HOW TO MATE AND UNMATE

MATE: ① ~ ④
UNMATE: ⑤ ~ ⑦

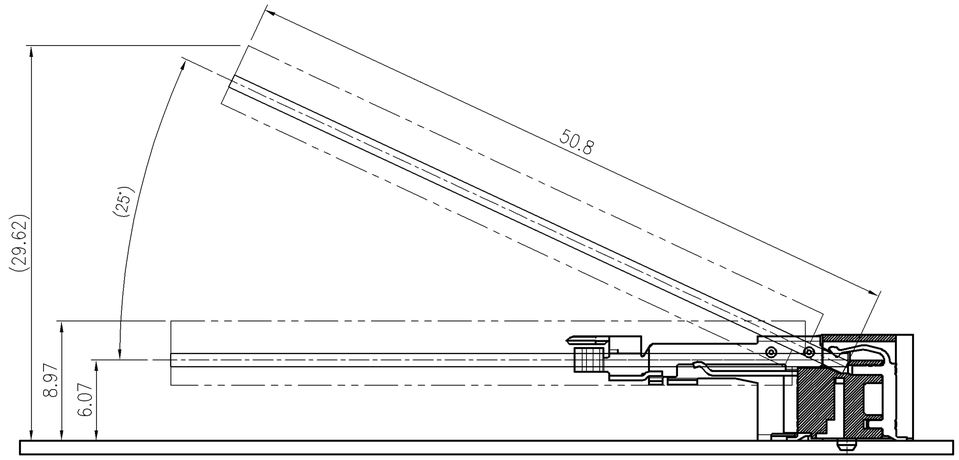

EJECT HEIGHT

THIS DRAWING IS A CONTROLLED DOCUMENT.

DIMENSIONS: mm

TOLERANCES UNLESS OTHERWISE SPECIFIED:

0 PLC	± –
1 PLC	± 0.15
2 PLC	± 0.1
3 PLC	± 0.05
4 PLC	± –
ANGLES	± 3°

MATERIAL –

FINISH –

DWN –
CHK –
APVD –
PRODUCT SPEC –
APPLICATION SPEC –
WEIGHT –

TE Connectivity

NAME
0.8mm PITCH FAX MODEM
SOCKET, 124 POSITIONS

SIZE	CAGE CODE	DRAWING NO	RESTRICTED TO
A3	00779	C-440360	—

CUSTOMER DRAWING | SCALE — | SHEET 3 OF 7 | REV N1

THIS DRAWING IS UNPUBLISHED. RELEASED FOR PUBLICATION -,- .
© COPYRIGHT 2011 BY TYCO ELECTRONICS CORPORATION. ALL RIGHTS RESERVED.

LOC	DIST
DW	—

REVISIONS

P	LTR	DESCRIPTION	DATE	DWN	APVD
		SEE SHEET 1.			

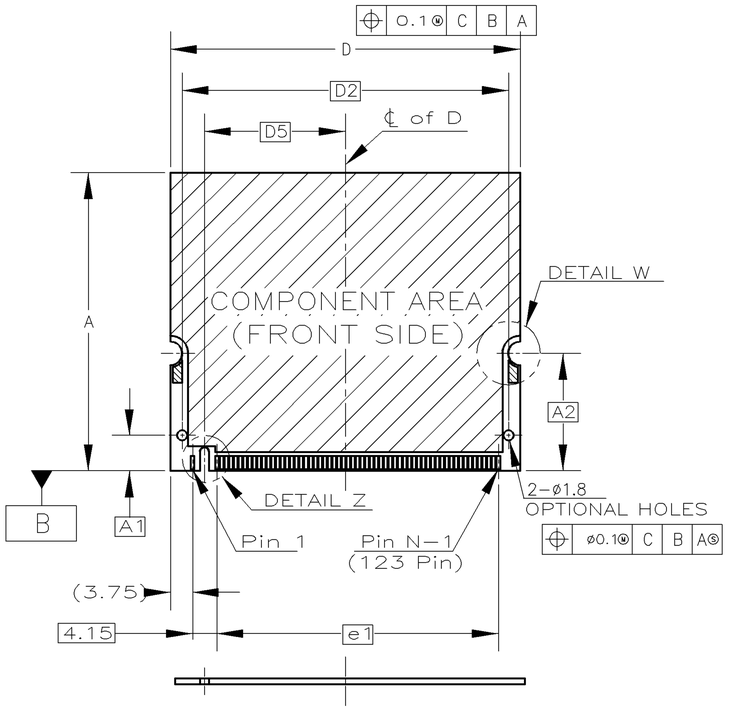

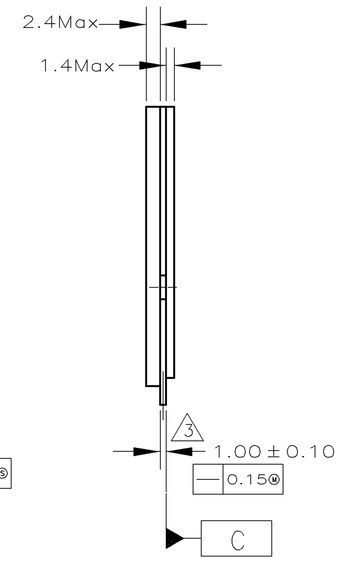

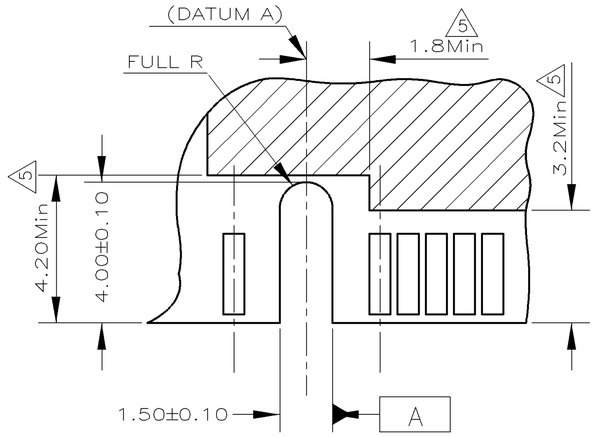

Detai : Z
(FRONT SIDE)

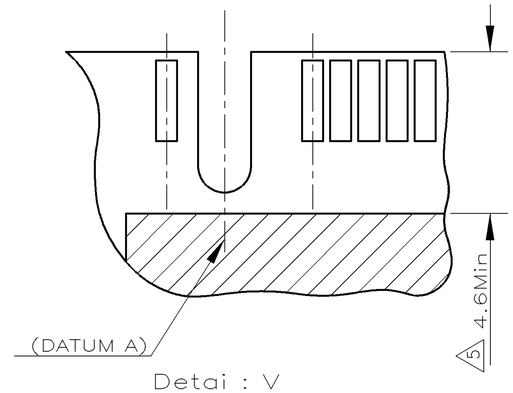

Detai : V
(BACK SIDE)

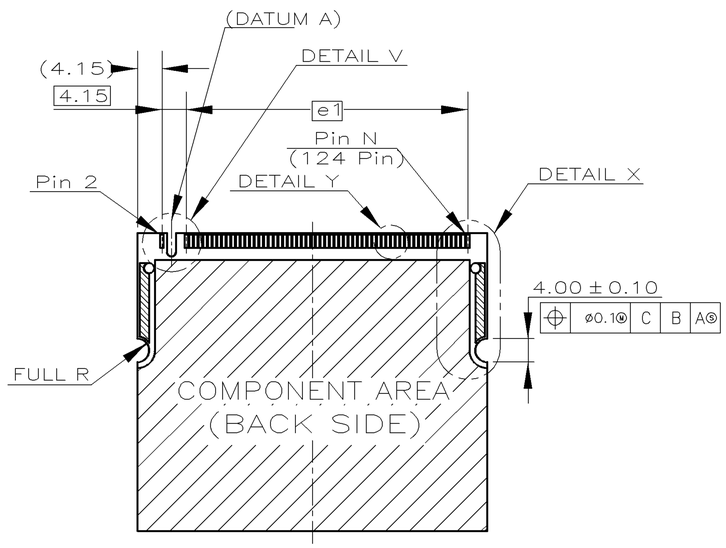

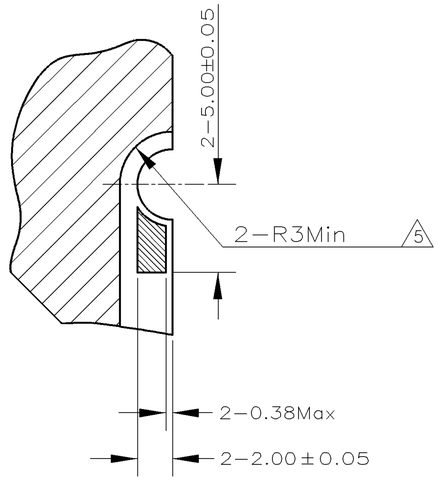

Detai : W
(FRONT SIDE)

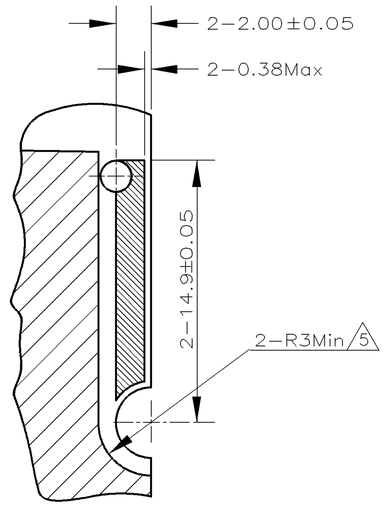

Detai : X
(BACK SIDE)

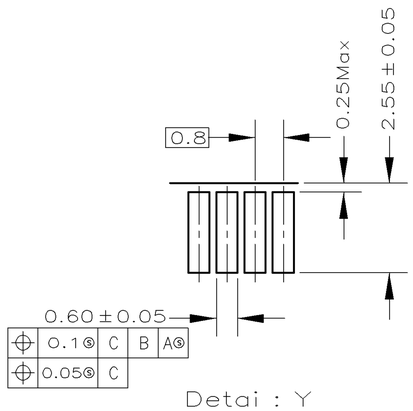

Detai : Y
(BACK SIDE)

THIS DRAWING IS A CONTROLLED DOCUMENT.

DIMENSIONS: mm

TOLERANCES UNLESS OTHERWISE SPECIFIED:

0 PLC	± –
1 PLC	± 0.15
2 PLC	± 0.1
3 PLC	± 0.05
4 PLC	± –
ANGLES	± 3°

MATERIAL –

FINISH –

DWN –
CHK –
APVD –
PRODUCT SPEC —
APPLICATION SPEC —
WEIGHT —

CUSTOMER DRAWING

TE Connectivity

NAME
0.8mm PITCH FAX MODEM
SOCKET, 124 POSITIONS

SIZE	CAGE CODE	DRAWING NO	RESTRICTED TO
A3	00779	C-440360	—

SCALE — SHEET 4 OF 7 REV N1

THIS DRAWING IS UNPUBLISHED. RELEASED FOR PUBLICATION -,- .
© COPYRIGHT 2011 BY TYCO ELECTRONICS CORPORATION. ALL RIGHTS RESERVED.

LOC	DIST
DW	—

REVISIONS

P	LTR	DESCRIPTION	DATE	DWN	APVD
		SEE SHEET 1.			

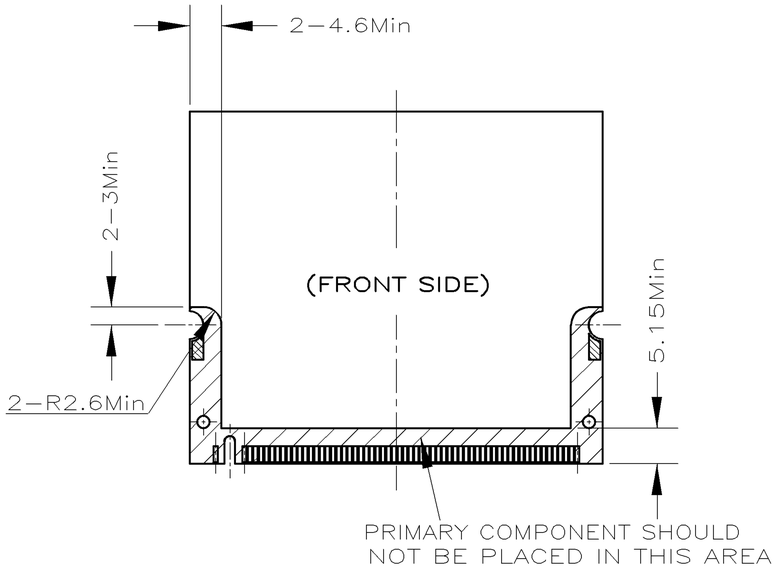

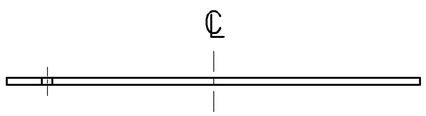

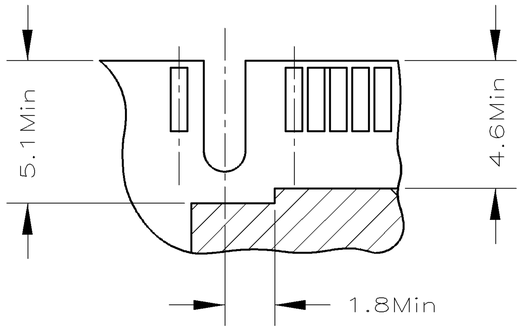

Detai : AA
(BACK SIDE)

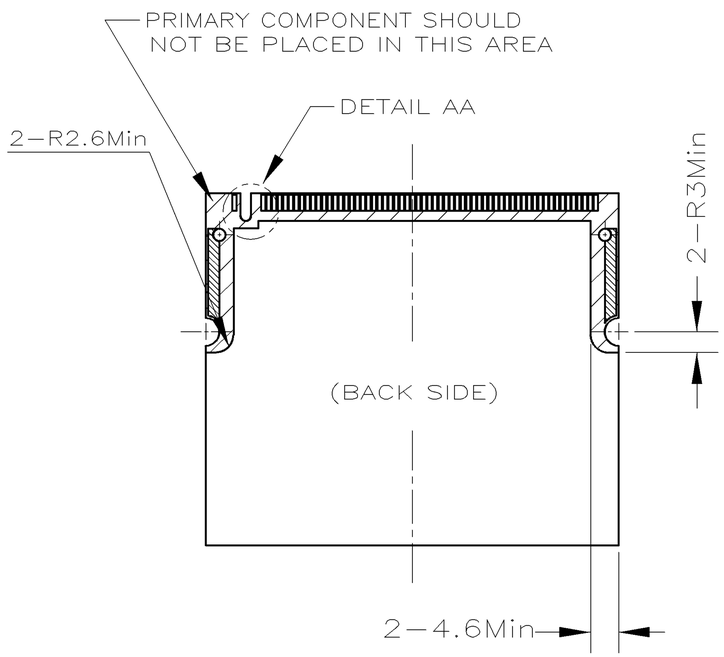

	VARIATIONS ALL DIMENSIONS IN mm					
	NORMAL HEIGHT 44.45			NORMAL HEIGHT 50.80		
	AA			BA		
SOYMBOL	MIN	NOM	MAX	MIN	NOM	MAX
A	44.3	44.45	44.60	50.65	50.80	50.95
A1	6.00	BSC		6.00	BSC	
A2	20.00	BSC		20.00	BSC	
D	59.45	59.6	59.75	59.45	59.6	59.75
D1	1.30	BSC		1.30	BSC	
D2	55.60	BSC		55.60	BSC	
D3	2.05	BSC		2.05	BSC	
D4	1.65	BSC		1.65	BSC	
D5	24.00	BSC		24.00	BSC	
e1	48.00	BSC		48.00	BSC	
N	124			124		

THIS DRAWING IS A CONTROLLED DOCUMENT.

DIMENSIONS: mm

TOLERANCES UNLESS OTHERWISE SPECIFIED:

0 PLC	± –
1 PLC	± 0.15
2 PLC	± 0.1
3 PLC	± 0.05
4 PLC	± –
ANGLES	± 3°

MATERIAL –

FINISH –

DWN –
CHK –
APVD –
PRODUCT SPEC –
APPLICATION SPEC –
WEIGHT –

TE Connectivity

NAME

0.8mm PITCH FAX MODEM
SOCKET, 124 POSITIONS

SIZE	CAGE CODE	DRAWING NO	RESTRICTED TO
A3	00779	C-440360	—

CUSTOMER DRAWING | SCALE — | SHEET 5 OF 7 | REV N1

THIS DRAWING IS UNPUBLISHED. RELEASED FOR PUBLICATION – , – .
© COPYRIGHT 2011 BY TYCO ELECTRONICS CORPORATION. ALL RIGHTS RESERVED.

LOC	DIST
DW	—

REVISIONS

P	LTR	DESCRIPTION	DATE	DWN	APVD
		SEE SHEET 1.			

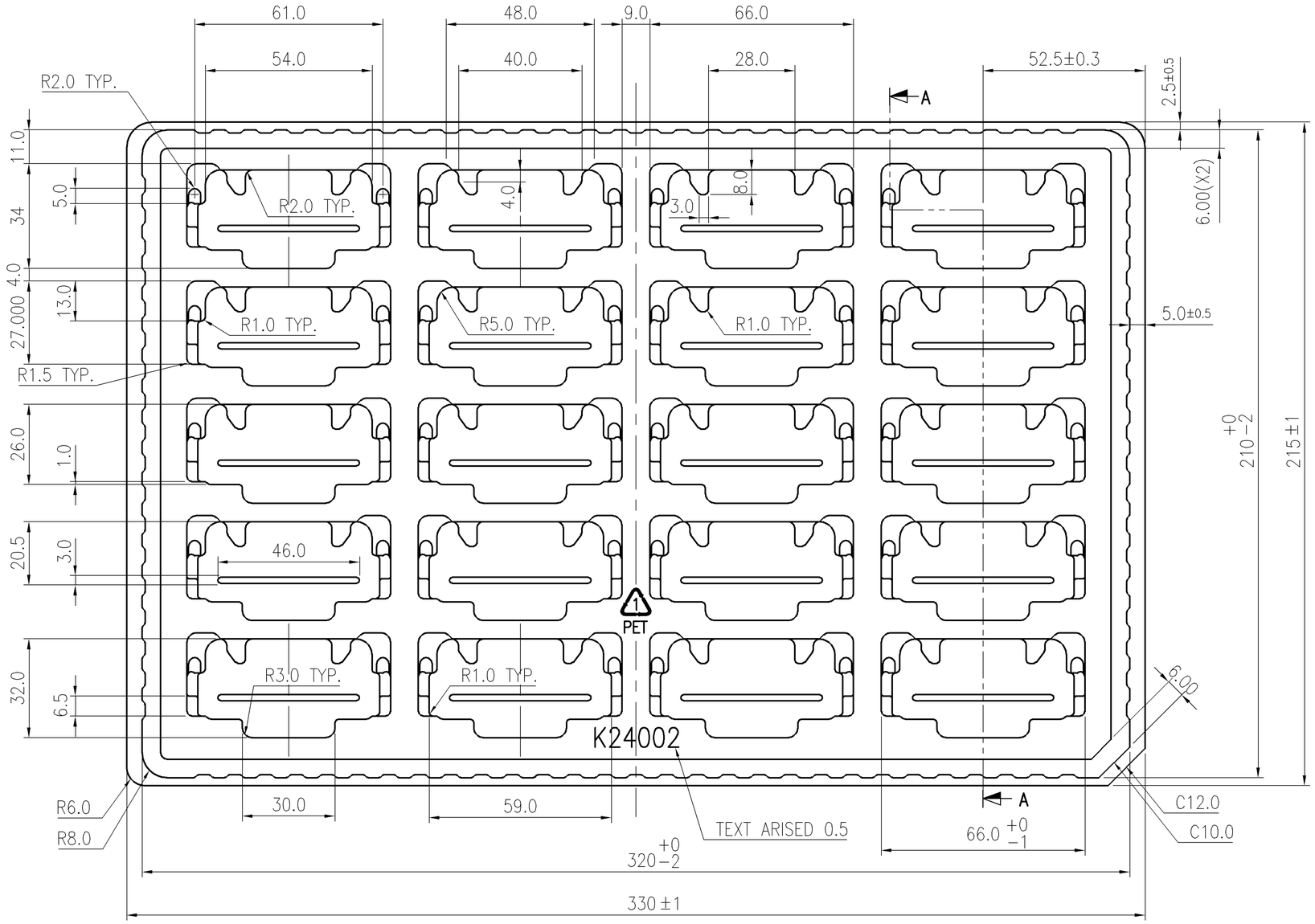

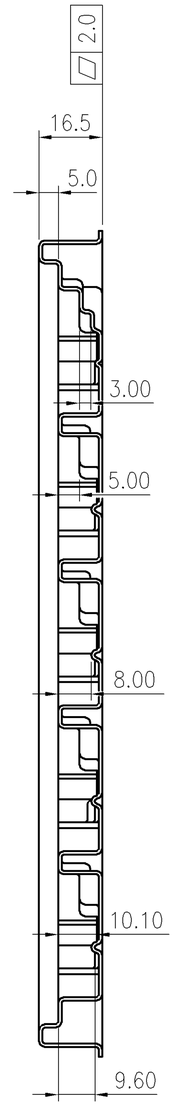

SEC. A–A

NOTES:

1. MATERIAL: PET, t=0.9 ± 0.20 mm.
2. ALLOWED RADIUS R0.5 UNLESS OTHERWISE SPECIFIED.
3. DRAFT ANGLE: 3° MAX.
4. PACKAGE: 30 TRAYS/CARTON, TOTAL: 600 PCS.

THIS DRAWING IS A CONTROLLED DOCUMENT.

DIMENSIONS: mm

TOLERANCES UNLESS OTHERWISE SPECIFIED:

0 PLC	± –
1 PLC	± 0.15
2 PLC	± 0.1
3 PLC	± 0.05
4 PLC	± –
ANGLES	± 3°

MATERIAL –

FINISH –

DWN –
CHK –
APVD –
PRODUCT SPEC –
APPLICATION SPEC –
WEIGHT –

TE Connectivity

NAME

0.8mm PITCH FAX MODEM SOCKET, 124 POSITIONS

SIZE	CAGE CODE	DRAWING NO	RESTRICTED TO
A3	00779	C-440360	—

CUSTOMER DRAWING | SCALE — | SHEET 6 OF 7 | REV N1

1470–19 (1/08)

THIS DRAWING IS UNPUBLISHED. RELEASED FOR PUBLICATION – , – .
© COPYRIGHT 2011 BY TYCO ELECTRONICS CORPORATION. ALL RIGHTS RESERVED.

LOC	DIST
DW	—

REVISIONS

P	LTR	DESCRIPTION	DATE	DWN	APVD
		SEE SHEET 1.			

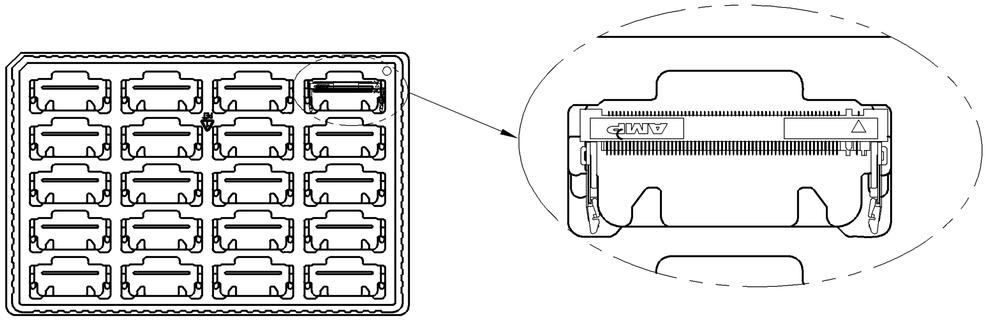

NOTES :

1. MATERIAL :
   TRAY: PVC, COLOR: TRANSPARENT.
   BOX: CORRUGATED FIBER
   TRANSPARENT BAG: PE, SIZE: 660mm*600mm*0.08mm
2. EACH BAG SHALL BE INCLUDED:
   * DESICCANT

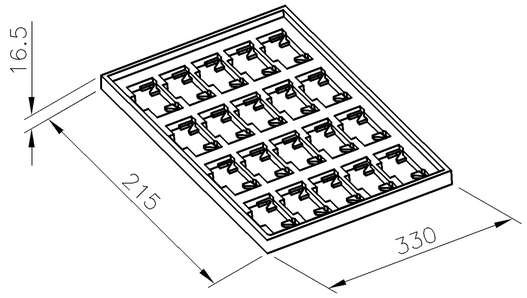

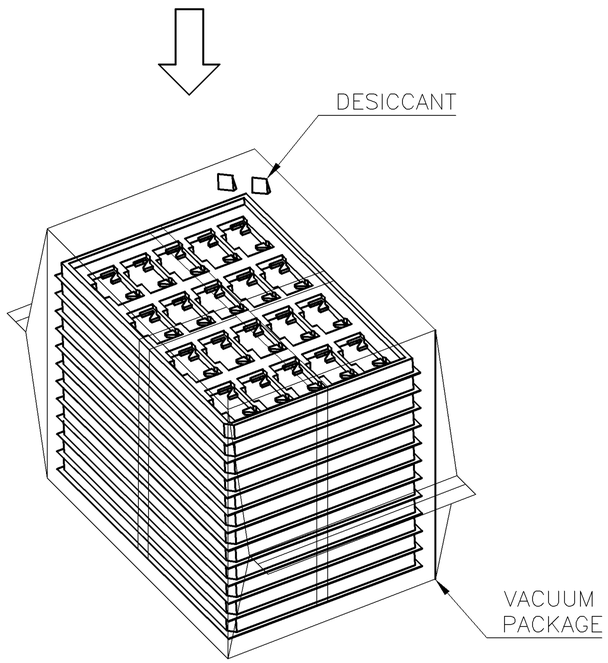

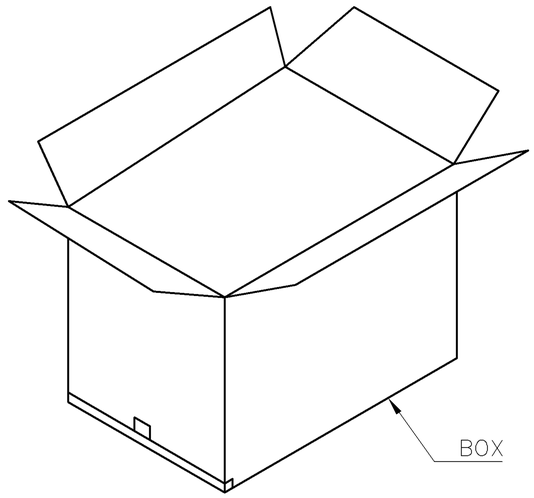

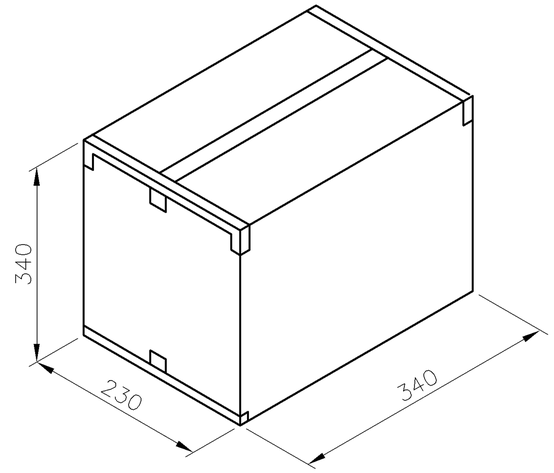

6.2 KG	3.5 KG	20	30	600
GROSS WEIGHT	NET WEIGHT	PCS/ TRAY	TRAY/ CARTON	PCS/ BOX

THIS DRAWING IS A CONTROLLED DOCUMENT.

DIMENSIONS: mm

TOLERANCES UNLESS OTHERWISE SPECIFIED:

0 PLC	± –
1 PLC	± 0.15
2 PLC	± 0.1
3 PLC	± 0.05
4 PLC	± –
ANGLES	± 3°

MATERIAL –

FINISH –

DWN –
CHK –
APVD –
PRODUCT SPEC –
APPLICATION SPEC –
WEIGHT –

TE Connectivity

NAME

0.8mm PITCH FAX MODEM SOCKET, 124 POSITIONS

SIZE	CAGE CODE	DRAWING NO	RESTRICTED TO
A3	00779	C-440360	—

CUSTOMER DRAWING | SCALE — | SHEET 7 OF 7 | REV N1