Picor, a Vicor company, provides highly integrated, silicon-centric power conversion and power management solutions. Picor's innovative product leadership is derived from high performance silicon integration, power architectures, and system level packaging. Picor's silicon-centric products complement Vicor's power technology and adhere to Vicor core strategy of innovation and performance. Picor products are marketed and sold via the Vicor sales channel.

## Product Portfolio

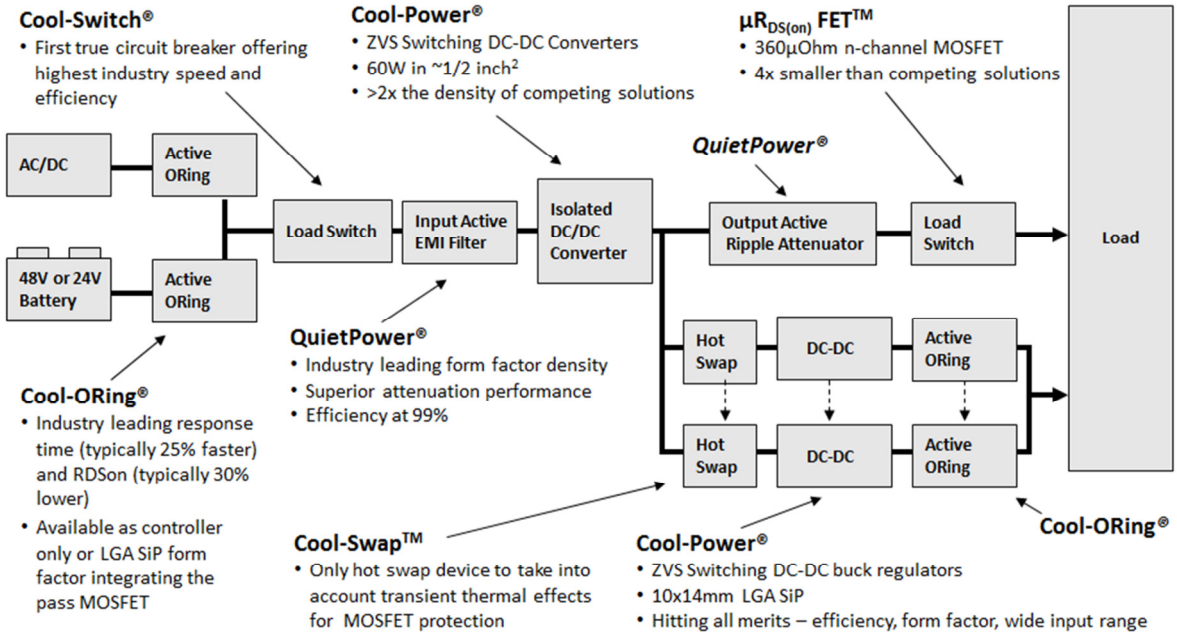


## Package Offering

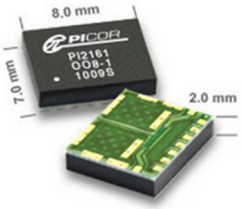


Cool-ORing
Cool-Switch
7x8mm LGA SiP

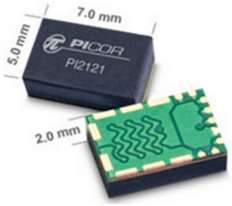


Cool-ORing
5x7mm LGA SiP

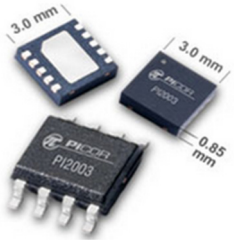


Cool-ORing
Cool-Switch
3x3mm DFN and 5x6mm SOIC

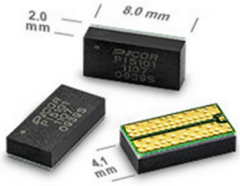


uRDS(on)FET
4.1x8mm LGA Package

Cool-Power
22x16.5mm ½ V·IChip

QuietPower
25x25mm LGA SiP

QuietPower
12.4x25mm LGA SiP

# Product Portfolio Information

## QuietPower® Active EMI Filters

- Leads the industry in density and size
- Compatible to industry standard DC-DC converters
- Both Input (QPI) and output (QPO) filters
- Packaged in 25x25x4.5mm or 12.4x25x4.5mm LGA open and lidded

**QuietPower® Output Filters - QPO**

- Reduces power supply output ripple from 1kHz to to 500kHz
- Can reduce output capacitance by a factor of 10

| | |
|---|---|
| QPO-1LZ | 3-30V, 10A Output filter |
| QPO-1LZ-01 | 3-30V, 10A Output Filter, Open Frame |
| QPO-2LZ | 0.3-5.5V, 20A Output Filter |
| QPO-2LZ-01 | 0.3-5.5V, 20A Output Filter, Open Frame |

**QuietPower® Input Filters - QPI**

- Common-mode (CM) and differential-mode (DM) attenuation
- Covers 150kHz to 30MHz (CISPR22 range)
- Optimized for applications that require EN55022 Class B limits
- Filters cover up to a 48V bus and up to 14A
- QPI-21 is recently released and is Picor's best performing filter

| | |
|---|---|
| QPI-3LZ | 24V, 7A Input Filter |
| QPI-3LZ-01 | 24V, 7A Input Filter, Open Frame |
| QPI-4LZ | 48V, 7A Input Filter |
| QPI-4LZ-01 | 48V, 7A Input Filter, Open Frame |
| QPI-5LZ | 24V, 14A Input Filter |
| QPI-5LZ-01 | 24V, 14A Input Filter, Open Frame |
| QPI-6LZ | 48V, 14A Input Filter |
| QPI-6LZ-01 | 48V, 14A Input Filter, Open Frame |
| QPI-7LZ | 24V, 6A Input Filter w/Hot-Swap |
| QPI-7LZ-01 | 24V, 6A Input Filter w/Hot-Swap, Open Frame |
| QPI-8LZ | 48V, 6A Input Filter w/Hot-Swap |
| QPI-8LZ-01 | 48V, 6A Input Filter w/Hot-Swap, Open Frame |
| QPI-21LZ | 48V, 14A Input Filter |
| QPI-21LZ-01 | 48V, 14A Input Filter, Open Frame |

**QuietPower® V·I Chip Input Filters - QPI**

- Optimized for use w/ V·I Chip PRM/VTM Converters

| | |
|---|---|
| QPI-9LZ | 24V, 6A V·I Chip optimized w/Hot-Swap |
| QPI-9LZ-01 | 24V, 6A V·I Chip optimized w/Hot-Swap, Open Frame |
| QPI-10LZ | 48V, 6A V·I Chip optimized w/Hot-Swap |
| QPI-10LZ-01 | 48V, 6A V·I Chip optimized w/Hot-Swap, Open Frame |
| QPI-11LZ | 24V, 7A V·I Chip optimized |
| QPI-11LZ-01 | 24V, 7A V·I Chip optimized, Open Frame |
| QPI-12LZ | 48V, 7A V·I Chip optimized |
| QPI-12LZ-01 | 48V, 7A V·I Chip optimized, Open Frame |

**QuietPower® MIL-COTS Input Filter - MQPI**

- Operation from -55°C to 125°C

| | |
|---|---|
| MQPI-18LP | 28V, 7A MIL-COTS Input Filter |
| MQPI-18LP-01 | 28V, 7A MIL-COTS Input Filter, Open Frame |

QuietPower®

## Picor Power Path Management Products

- Lead industry in either efficency/losses, speed, and/or density
- PI2003/PI2207 common pair used for High/Low Oring applications
- Newest family addition is Cool-Swap™ PI2211

**Cool-ORing® - High performance Active ORing solutions**

- For high availability systems using redundant power architectures
- Replaces common diode schemes w/ a more efficient solution
- Packaged as controller only or Controller w/ MOSFET SIP solution
- Extremly fast turn off at 80nS
- SiPs offer extremly low losses with 8.5mOhm resistance (PI2127)

**Cool-ORing® - Controllers**

| | |
|---|---|
| PI2001-00-QEIG | ORing Controller, 5x6mm SOIC |
| PI2001-00-SOIG | ORing Controller, 3x3mm DFN |
| PI2002-00-QEIG | ORing Controller w/ Load Disconnect, 3x3mm DFN |
| PI2002-00-SOIG | ORing Controller w/ Load Disconnect, 5x6mm SOIC |
| PI2003-00-QEIG | Low-Side OR-ing Controller, 3x3mm DFN |
| PI2003-00-SOIG | Low Side OR-ing Controller, 5x6mm SOIC |
| PI2007-00-QEIG | High-Side OR-ing Controller, 3x3mm DFN |

**Cool-ORing® - SiP Solutions**

| | |
|---|---|
| PI2121-00-LGIZ | 8V, 24A FULL-FUNCTION ACTIVE ORING SIP |
| PI2122-00-LGIZ | FULL-FUNCTION ACTIVE ORING SIP w/ LOAD DISCONNECT |
| PI2126-00-LGIZ | 30V, 12A FULL-FUNCTION ACTIVE ORING SIP |
| PI2127-01-LGIZ | 60V, 12A FULL-FUNCTION ACTIVE ORING SIP |

**Cool-Switch® - Electronic Circuit Breaker**

- For high availability systems using redundant power architectures
- Replaces common diode schemes w/ a more efficient solution
- Packaged as controller only or controller w/ MOSFET SIP solution

| | |
|---|---|
| PI2061-00-QEIG | Cool-Switch® Controller 7x8mm LGA SIP |
| PI2161-01-LGIZ | 60V, 12A Cool-Switch SiP Solution 3x3mm DFN |

**µRDS(on)FET® - 360µOhm RDS(on) 5V, N-Channel MOSFET**

- Industry leading performance
- Enables practically lossless designs for high current routing
- Packaged in 4.1 x 8 x 2mm LGA

| | |
|---|---|
| PI5101-00-LGIZ | 5V, 360 MICRO OHM N-CHANNEL MOSFET |

**Cool-Swap™ - 12V Hot Swap Controller and Electronic Circuit Breaker**

- Hot swap protection with Tru-SOA™ and GlitchCatcher Technology
- Packaged in a 4x4x0.85mm 24-pin QFN

| | |
|---|---|
| PI2211 | 12V Hot Swap Controller 24-pin QFN |

Power Path Management

## Cool-Power® DC-DC ZVS Switching Converters

- ZVS core powered devices offering high Vin operating ranges
- HIgh density designs packaged in 10x14mm LGA SIP or 1/2V·IChip

**Cool-Power® Isolated DC-DC ZVS Switching Converters**

- Complete module solution (Controller + Transformer + FETs)
- 2,250V isolation with safety approvals
- 48Vin devices offer 100V for 100mS surge protection
- All packaged 22x16.5x6.7mm ½ V·IChip package

| | |
|---|---|
| PI3101-00-HVIZ | 48V/3.3V 60W Isolated DC-DC Converter 1/2V·IChip |
| PI3105-00-HVIZ | 48V/12V 50W Isolated DC-DC Converter 1/2V·IChip |
| PI3106-01-HVIZ | 24V/12V 50W Isolated DC-DC Converter 1/2V·IChip |
| PI3110-01-HVIZ | 48V/18V 50W Isolated DC-DC Converter 1/2V·IChip |

**Cool-Power® MIL-COTS Isolated DC-DC ZVS Switching Converters**

- Operation from -55°C to 125°C

| | |
|---|---|
| PI3106-00-HVMZ | 24V/12V MILCOTS Isolated DC-DC Converter 1/2V·IChip |

**Cool-Power® DC-DC ZVS Switching Buck Regulators**

- High efficency performance from 90 to 96%
- Current ouput of 8A+
- Module design with controller + FETs and extrenal inductor
- All packaged in 10x14mm LGA SiP

| | |
|---|---|
| PI3311 | 8-36Vin, 1.5Vout Set DC-DC Buck regulator 10x14 LGA SIP |
| PI3312 | 8-36Vin, 2.5Vout Set DC-DC Buck regulator 10x14 LGA SIP |
| PI3301 | 8-36Vin, 3.3Vout Set DC-DC Buck regulator 10x14 LGA SIP |
| PI3302 | 8-36Vin, 5Vout Set DC-DC Buck regulator 10x14 LGA SIP |
| PI3303 | 8-36Vin, 12Vout Set DC-DC Buck regulator 10x14 LGA SIP |
| PI3305 | 8-36Vin, 15Vout Set DC-DC Buck regulator 10x14 LGA SIP |

Cool-Power®