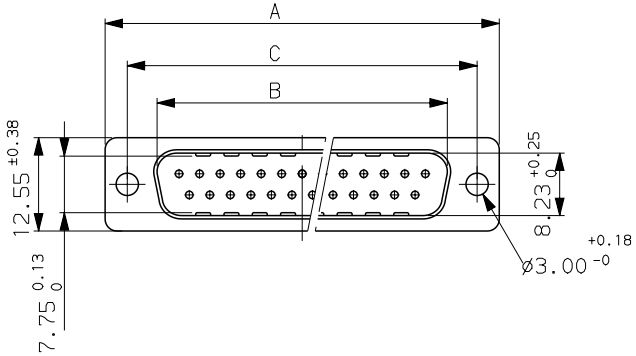

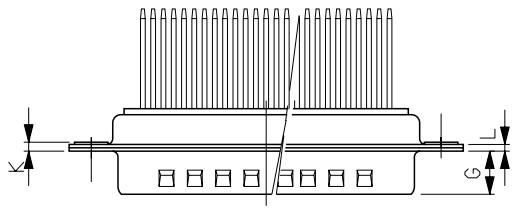

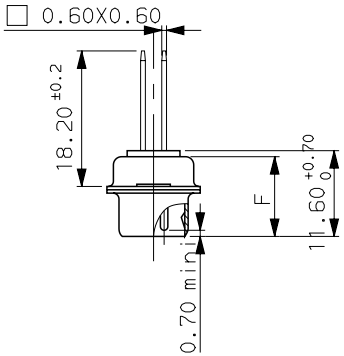

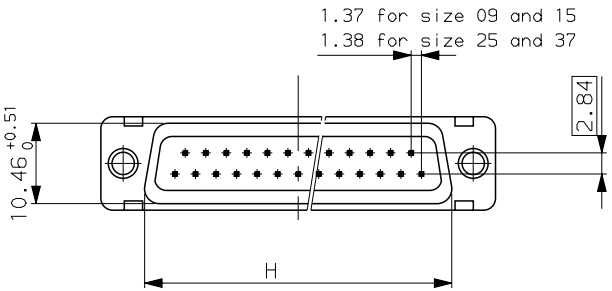

ELECTRICAL DATA

-I max	7.5A
-Contact resistance	≤10mΩ
-Insulation resistance	>500MΩ
-TEST VOLTAGE	
contact/contact	>1000V
contact/ground	>1200V

MECHANICAL DATA

-Contact force	>0.14N
-Retention force	>40N
-Insertion force	according t0 DIN41652 Part 2
-Withdrawal force	according t0 DIN41652 Part 2
-Mechanical endurance	:500 matings / unmatings for plating .00
	:200 matings / unmatings for plating .31
-Material shell	steel ,brigt tin-Lead
-Material insulator	glass filled thermoplastic UL94V0
-Material contacts	pin:brass
-Finish on contact area	See table
-Finish on termination end	bright tin-Lead over nickel
-Solderability	according to DIN 41640 Part 70,test 12a
-Schock	according to DIN41640 Part 14,test 6c,50g
-Vibration	according to DIN41640 Part 15,test 6d,20g
	10 t0 2000Hz:discontinuity≤1µs

ENVIRONMENTAL DATA

-Climatic category	-55°/ +125°/21
-Corrosion	salt spray:24h

Shell size	Number of contacts	A +0.76 0	B +0.25 0	C ±0.12	F +0.51 0	G	H +0.51 0	K maxi	L +0.22 0	PART NUMBER	PART NUMBER	PART NUMBER
E	09	30.43	16.79	24.99	10.47	5.90 +0.15 0	19.02	1.50	0.80	DEP09P400TX	DEP09P431TX	DEP09P443TX
A	15	38.76	25.12	33.32	10.47	5.90 +0.15 0	27.25	1.50	0.80	DAP15P400TX	DAP15P431TX	DAP15P443TX
B	25	52.65	38.84	47.04	10.43	5.70 +0.25 0	41.02	1.50	0.80	DBP25P400TX	DBP25P431TX	DBP25P443TX
C	37	68.94	55.30	63.50	10.56	5.70 +0.25 0	57.45	1.50	1.00	DCP37P400TX	DCP37P431TX	DCP37P443TX
										0.4µ Au	Flash Au	0.76µ Au

ISS	DATE	Latest modification by : JARRY	MOD N°
c	01/10/01	Add plating 443 --	--

Designed by: JOUBERT date:17/03/98 Type of drawing: CLIENT

TITLE : PIN CONNECTORS D SUBMINIATURE WITH WIRE WRAP

SHEET 1/1

SCALE: 1.5

FCI FRAMATOME GROUP
FRAMATOME CONNECTORS FRANCE
Rue Louis Breguet - BP 05
72024 LE MANS Cedex
Tel. 33 (16) 43.84.08.43

This document is the property of FRAMATOME CONNECTORS FRANCE
It must not be reproduced or communicated without permission in writing from the owners

FORMAT A3

SOURIAU DRG N° C01-8637-0417

PROJECT M94D001

PDM: Rev:C STATUS:Released Printed: Sep 28, 2005