THIS DRAWING IS UNPUBLISHED. RELEASED FOR PUBLICATION –,– .
© COPYRIGHT – By – ALL RIGHTS RESERVED.

LOC	DIST
A1	—

VERWENDET FÜR
E 92–9803

REVISIONS

P	LTR	DESCRIPTION	DATE	DWN	APVD
	C	HOUSING RESIN MATERIAL CHANGED	24DEC2013	TJ	JK

POLZ.	L	BESTELL–NR.	
–	–	–	
2	5.08	~~215 301–2~~	OBSOLETE
3	7.62	~~–3~~	OBSOLETE
4	10.16	~~–4~~	OBSOLETE
5	12.70	~~–5~~	OBSOLETE
6	15.24	–6	
7	17.78	~~–7~~	OBSOLETE
8	20.32	~~–8~~	OBSOLETE
9	22.86	–9	
10	25.40	1– ~~–0~~	OBSOLETE
11	27.94	1– –1	
12	30.48	1– –2	
13	33.02	1– –3	
14	35.56	1– –4	
15	38.10	1– –5	
16	40.64	1– ~~–6~~	OBSOLETE
17	43.18	1– ~~–7~~	OBSOLETE
18	45.72	1– ~~–8~~	OBSOLETE
19	48.26	1– –9	
20	50.80	2– –0	
21	53.34	~~2– –1~~	OBSOLETE (8)
22	55.88	~~2– –2~~	
23	58.42	~~2– –3~~	
24	60.96	~~2– –4~~	
25	63.50	~~2– –5~~	
26	66.04	~~2– –6~~	
27	68.58	~~2– –7~~	
28	71.12	~~2– –8~~	
29	73.66	~~2– –9~~	
30	76.20	~~3– –0~~	
31	78.74	~~3– –1~~	
32	81.28	~~3– –2~~	
33	83.82	~~3– –3~~	
34	86.36	~~3– –4~~	
35	88.90	~~3– –5~~	
36	91.44	3– ~~215 301–6~~	OBSOLETE

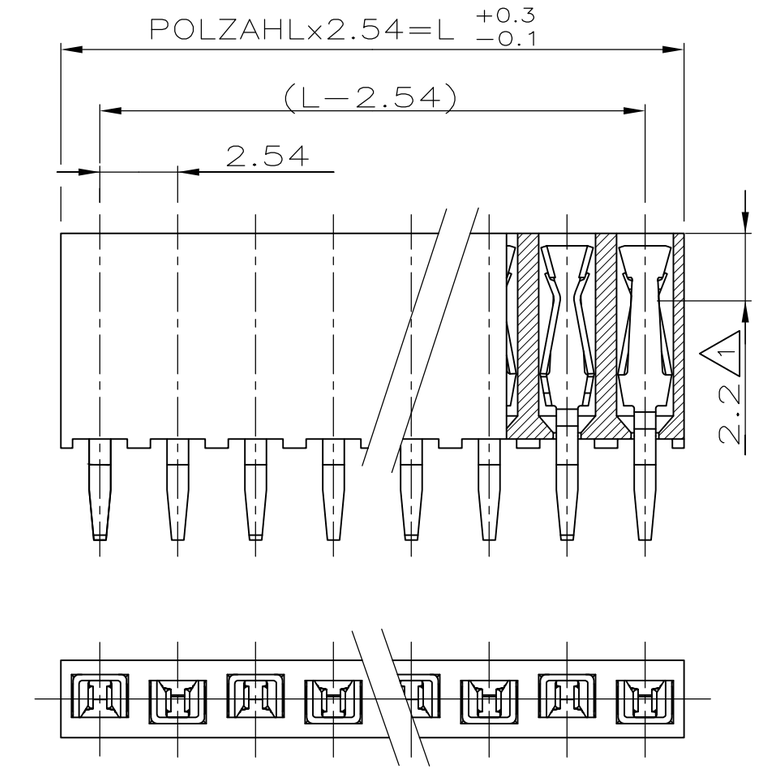

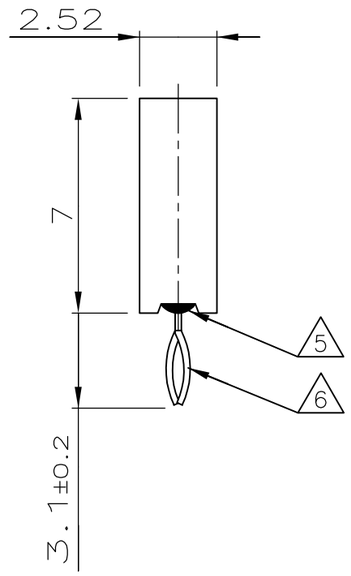

NOTES:

1. KONTAKTPUNKT
2. IM KONTAKTBEREICH 0.8µm Au ÜBER 1.3µm Ni
   IM LÖTBEREICH 3.0–5.0µm Sn ÜBER 1.3µm Ni
3. EMPFOHLENE LEITERPLATTENDICKE 1.6mm
4. STECKBAR MIT MODU II STIFTEN ϕ/□ 0.63
5. HOCH TEMPERATURBESTÄNDIGER KLEBER
6. FIXIERUNG IN LEITERPLATTE DURCH BIEGUNG DER KONTAKTENDEN
7. HV100 BUCHSENSTECKER VERPACKT IN ANTI–STATISCHEM BLISTER TRAY
8. OBSOLETE PARTS: OBSOLETE CIS STREAMLINING PER D.RENAUD/D.SINISI

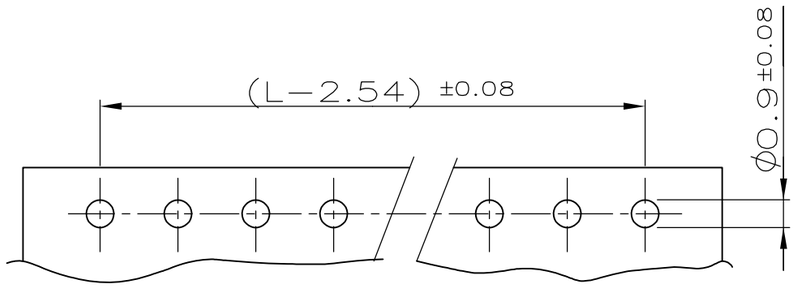

EMPFOHLENES BOHRBILD

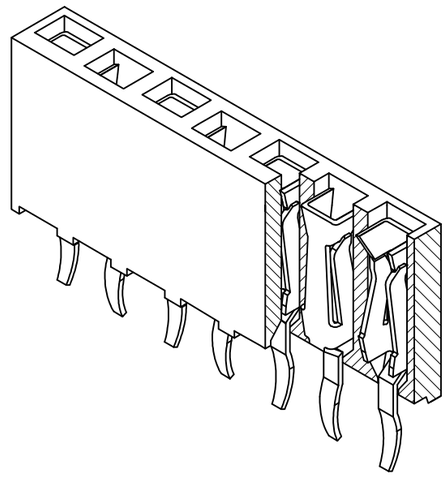

NICHT VERMASSTE KANTEN SIND NICHT MAßSTÄBLICH

ÄNDERUNGEN DIE DEM TECHNISCHEN FORTSCHRITT DIENEN, BEHALTEN WIR UNS VOR

DESCRIPTION	MATERIAL	COLOUR/FINISH
HV 100 CONTACT	CuSn	(2)
HV 100 HOUSING	PBTP GV	GREEN

THIS DRAWING IS A CONTROLLED DOCUMENT.

DIMENSIONS: mm

TOLERANCES UNLESS OTHERWISE SPECIFIED: ±0.1mm
0 PLC ± –
1 PLC ± –
2 PLC ± –
3 PLC ± –
4 PLC ± –
ANGLES ± –

MATERIAL: SEE TABLE

FINISH: SEE NOTE 2

DWN WRULICH 13.12.88
CHK M.SCHAARSCHMIDT 06.12.90
APVD —
PRODUCT SPEC 108–19056
APPLICATION SPEC —
WEIGHT —

TE Connectivity

NAME: HV 100 VERTICAL CONNECTOR, SINGLE ROW, 7.0mm HEIGHT, TOP ENTRY, GOLD (SEALED VERSION)

SIZE	CAGE CODE	DRAWING NO	RESTRICTED TO
A3	00779	C–215301	—

CUSTOMER DRAWING | SCALE 5:1 | SHEET 1 OF 1 | REV C

1470–19 (3/11)