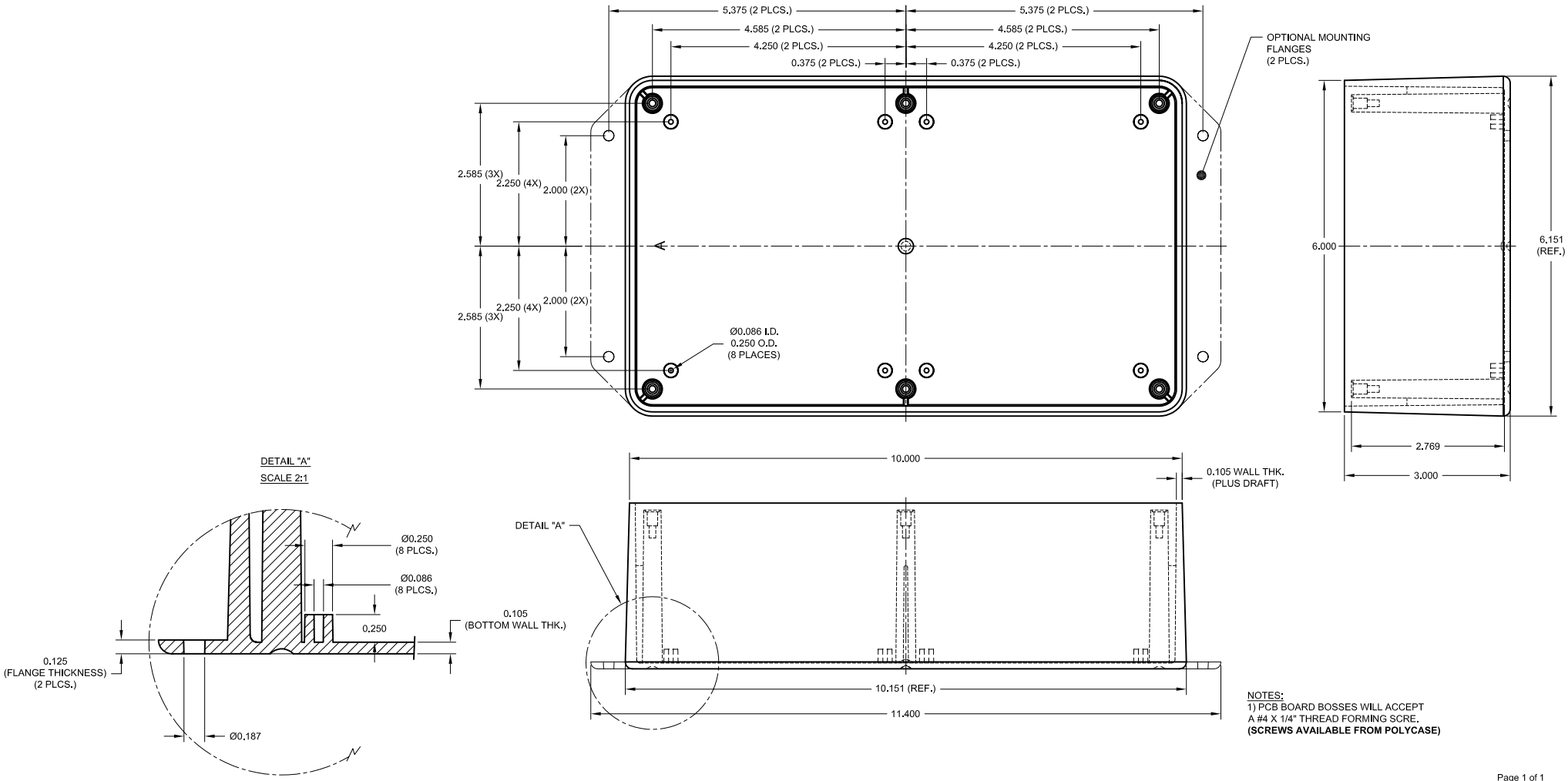

NOTES:
1) PCB BOARD BOSSES WILL ACCEPT A #4 X 1/4" THREAD FORMING SCRE.
(SCREWS AVAILABLE FROM POLYCASE)

Page 1 of 1

REV	DESCRIPTION	DATE

POLYCASE YOUR PERFECT FIT

1305 CHESTER IND. PARKWAY
AVON, OHIO 44011-1083 U.S.A.
PH#: 1-800-248-1233, 440-934-0444
FAX#: 440-934-0088

TOLERANCES UNLESS OTHERWISE SPECIFIED
X.XX ±.030
X.XXX ±.020

THIS DRAWING AND THE INFORMATION CONTAINED ARE THE PROPERTY OF POLYCASE AND IT IS NOT TO BE REPRODUCED, COPIED OR USED IN ANY WAY DETRIMENTAL TO THE INTEREST OF POLYCASE

DRWN BY	APP. BY	SCALE	DATE
B.B.		FULL	3/19/04

JOB NO: -
PRODUCT: DC-96B
CUSTOMER:
TITLE: Product Detail Drawing

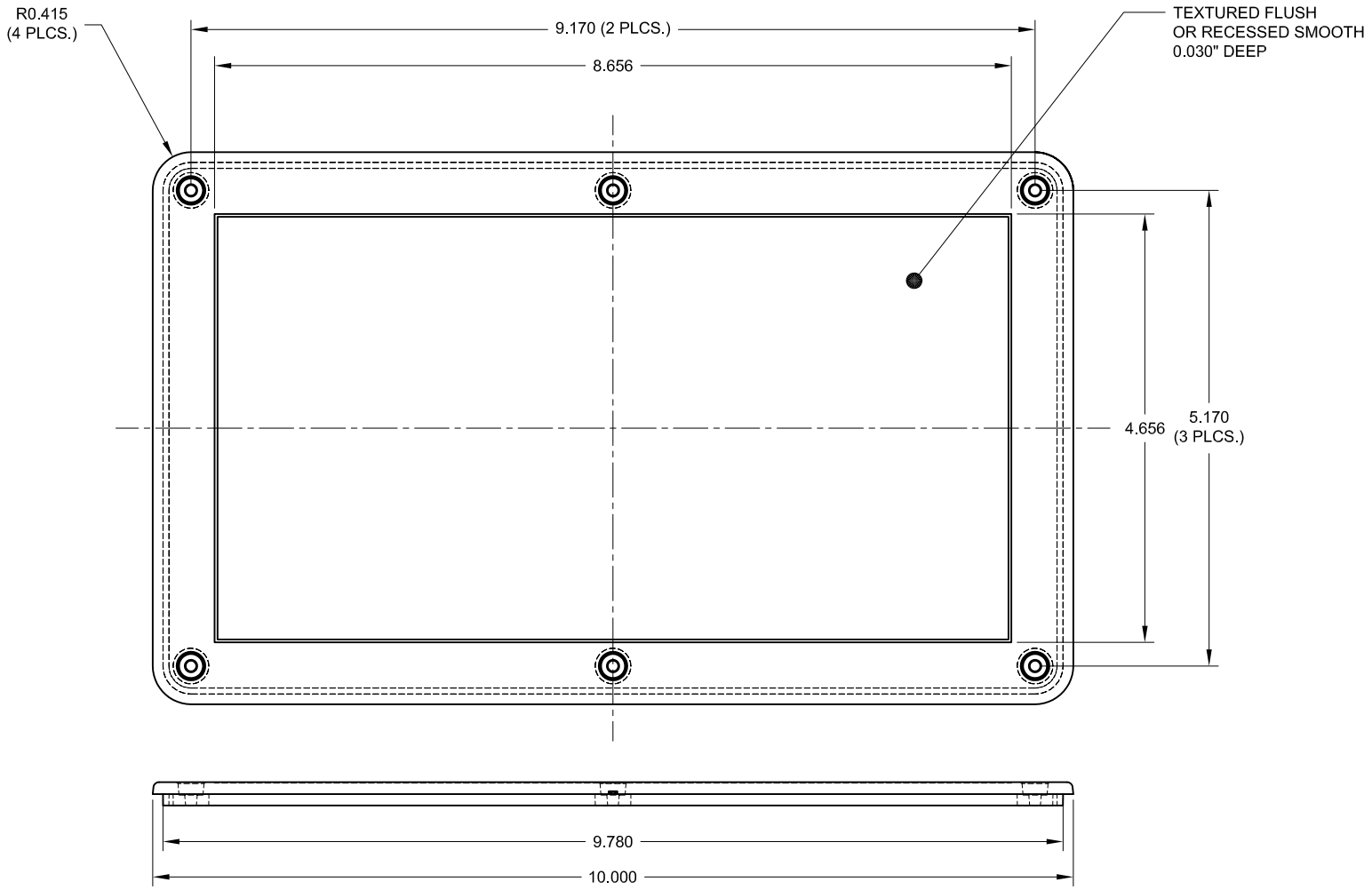

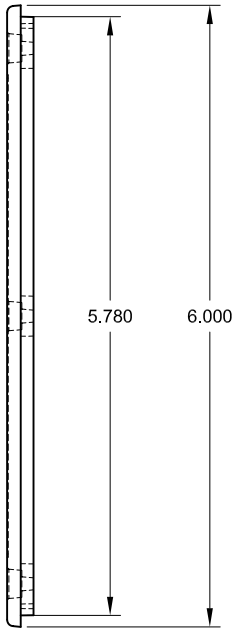

REV	DESCRIPTION	DATE

POLYCASE™
YOUR PERFECT FIT

1305 CHESTER IND. PARKWAY
AVON, OHIO 44011-1083 U.S.A.
PH#: 1-800-248-1233, 440-934-0444
FAX#: 440-934-0088

TOLERANCES UNLESS OTHERWISE SPECIFIED
X.XX ±.030
X.XXX ±.020

THIS DRAWING AND THE INFORMATION CONTAINED ARE THE PROPERTY OF POLYCASE AND IT IS NOT TO BE REPRODUCED, COPIED OR USED IN ANY WAY DETRIMENTAL TO THE INTEREST OF POLYCASE

DRWN BY	APP. BY	SCALE	DATE
B.B.		FULL	3/19/04

JOB NO: -
-

PRODUCT: -
DC-96C

CUSTOMER:

TITLE: Product Detail Drawing