THIS DRAWING IS UNPUBLISHED. RELEASED FOR PUBLICATION -,- .
© COPYRIGHT - BY TYCO ELECTRONICS CORPORATION. ALL RIGHTS RESERVED.

LOC	DIST
CM	00

REVISIONS

P	LTR	DESCRIPTION	DATE	DWN	APVD
	C	EC 0G3B 1221 04	09AUG05	BSV	DB
	C1	REVISED PER ECO-09-022908	06OCT09	KK	AEG

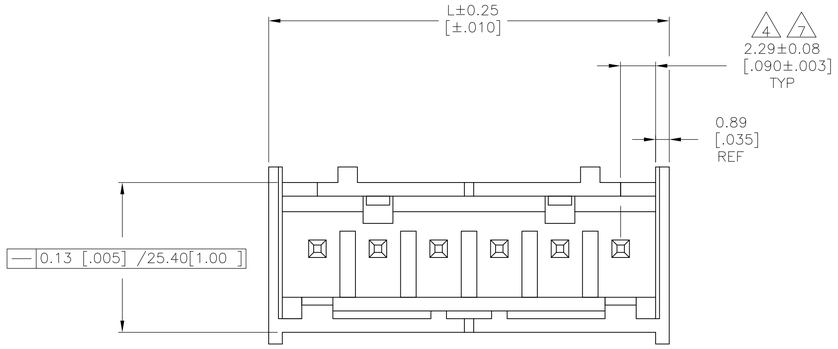

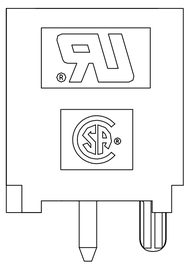

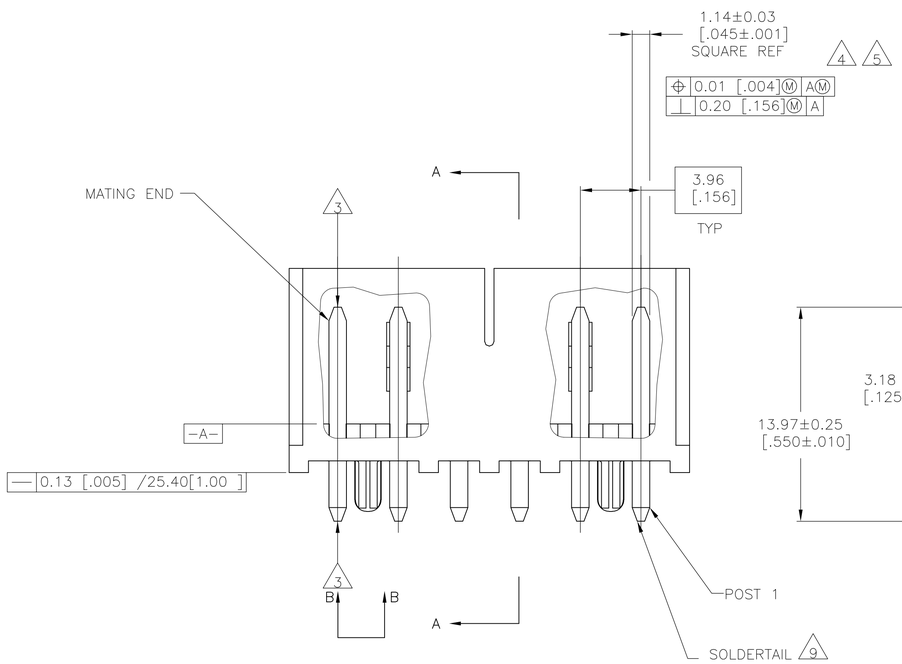

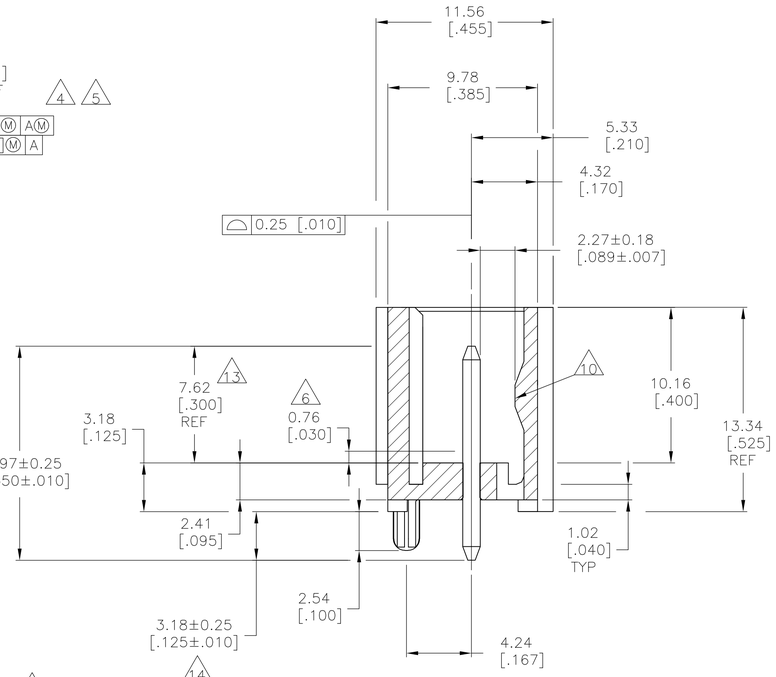

1. MATERIAL:
HOUSING – THERMOPLASTIC POLYESTER,GLASS FILLED,UL94-0.
POST – COPPER ALLOY

2. FINISH:
HOUSING – BLACK
POST – (SEE NOTES 13 & 14 FOR PLATING).

3. POST TO WITHSTAND 3LBS (16N) MIN AXIAL FORCE IN THIS DIRECTION WITHOUT DISLODGING.

4. APPLIES AT -A-

5. APPLIES WHEN HEADER IS STRAIGHT .

6. PLASTIC PROJECTIONS PERMITTED IN THIS ZONE.

7. COORDINATE DIMENSIONS APPLIES FROM CENTER OF ACTUAL FEATURE.

8. SOLDER SIDE OF BOARD IS SHOWN.

9. POST SOLDERTAIL MUST COMPLY WITH AMP SOLDERABILITY SPEC 109-11-2.

10. LATCH DETENT FEATURE APPEARS 1 PLACE ON EACH END OF PART (MAX OF 2 PER PART) ON ALL POSITIONS 4 THRU 12. THE LATCH APPEARS ONLY ONE PLACE ON 2 & 3 POSITION PARTS.

11. DIMENSIONS IN BRACKETS ARE IN INCHES.

12. THE RETENTION TABS PROVIDE A ONE TIME INTERFERENCE FIT IN THE 1.63 [.064] DIAMETER P.C. BOARD HOLE FOR HEADER ASSEMBLY RETENTION DURING SOLDERING. FOUR TABS PER PEG, TWO PEGS PER HEADER ASSEMBLY (ONE PEG ONLY FOR -2 POSITION SIZE).

13. GOLD PLATE AREA, 0.000381 [.000015] MIN ALL SIDES: OVER NICKEL UNDERPLATE, 0.00127 [.000050] MIN ALL SIDES AND ENTIRE LENGTH OF POST.

14. BRIGHT TIN LEAD (93/7) PLATE AREA 0.00381 – 0.0089 [.000150 – .000350] ALL FOUR SIDES, 3.18 [.125] MIN. FOR -2 THRU -12, MATTE TIN PLATE AREA, .000150-.000350 THICK ALL FOUR SIDES, .125 MIN FOR -22 THRU -32.

15. OBSOLETE PARTS: OBSOLETE CIS STREAMLINING PER D.RENAUD/D.SINISI

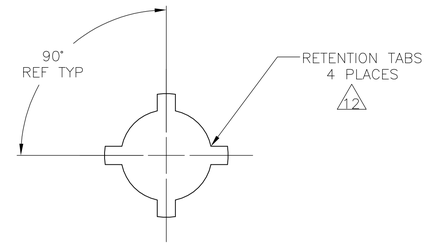

VIEW B-B
2 PLACES
SCALE 10:1

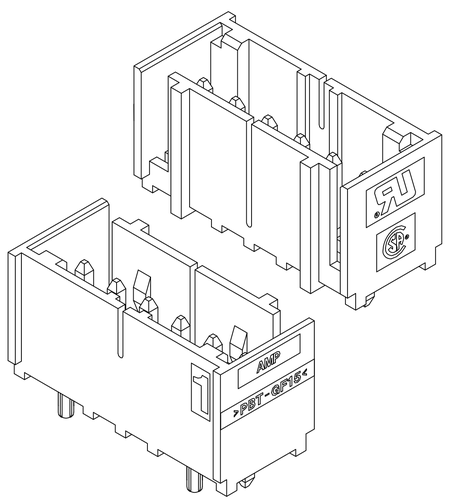

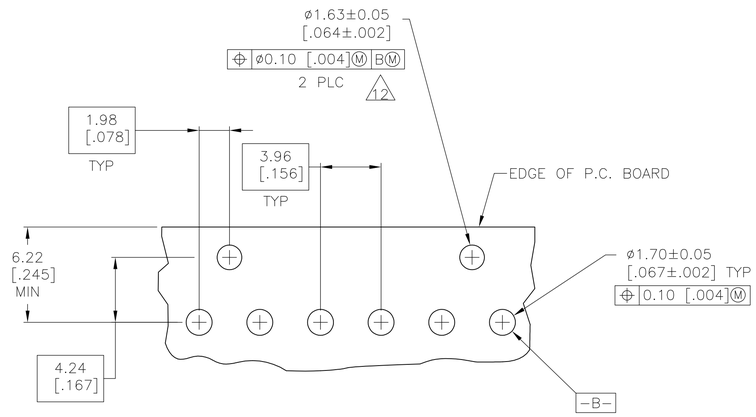

RECOMMONDED MOUNTING HOLE PATTERN FOR 1.57 [.062] THICK P.C. BOARD 8

FINISH	MM	IN	NO OF POSN	PART NUMBER
TIN	49.94	1.966	12	3-647143-2
TIN	45.97	1.810	11	3-647143-1
TIN	42.01	1.654	10	3-647143-0
TIN	38.05	1.498	9	2-647143-9
TIN	34.09	1.342	8	2-647143-8
TIN	30.12	1.186	7	2-647143-7
TIN	26.16	1.030	6	2-647143-6
TIN	22.20	.874	5	2-647143-5
TIN	18.24	.718	4	2-647143-4
TIN	14.27	.562	3	2-647143-3
TIN	10.31	.406	2	2-647143-2
	L DIM			

FINISH	MM	IN	NO OF POSN	PART NUMBER
TIN-LEAD	49.94	1.966	12	15 ~~1-647143-2~~
TIN-LEAD	45.97	1.810	11	15 ~~1-647143-1~~
TIN-LEAD	42.01	1.654	10	15 ~~1-647143-0~~
TIN-LEAD	38.05	1.498	9	647143-9
TIN-LEAD	34.09	1.342	8	15 ~~647143-8~~
TIN-LEAD	30.12	1.186	7	647143-7
TIN-LEAD	26.16	1.030	6	15 ~~647143-6~~
TIN-LEAD	22.20	.874	5	647143-5
TIN-LEAD	18.24	.718	4	15 ~~647143-4~~
TIN-LEAD	14.27	.562	3	647143-3
TIN-LEAD	10.31	.406	2	15 ~~647143-2~~
	L DIM			

METRIC

THIS DRAWING IS A CONTROLLED DOCUMENT.

DIMENSIONS: mm [INCHES]

TOLERANCES UNLESS OTHERWISE SPECIFIED:
0 PLC ± –
1 PLC ± –
2 PLC ± –
3 PLC ± .005
4 PLC ± –
ANGLES ± 0° 30'

MATERIAL –
FINISH –

DWN B. LEWIS 16 JUN 98
CHK R. SWING 16 JUN 98
APVD D. CLARK 16 JUN 98
PRODUCT SPEC –
APPLICATION SPEC –
WEIGHT –

Tyco Electronics
Tyco Electronics Corporation
Harrisburg, Pa 17105-3608

NAME
MTA-156 SHROUDED HEADER
ASSEMBLY,STRAIGHT .045 SQUARE
POST,.000015 GOLD,W/ RETENTION PEG

SIZE	CAGE CODE	DRAWING NO	RESTRICTED TO
A1	00779	C-647143	–

CUSTOMER DRAWING
SCALE 5:1 SHEET 1 OF 1 REV C1