THIS DRAWING IS UNPUBLISHED. RELEASED FOR PUBLICATION 2010
© COPYRIGHT 2010 BY TYCO ELECTRONICS CORPORATION. ALL RIGHTS RESERVED.

LOC	DIST
E	B

REVISIONS

P	LTR	DESCRIPTION	DATE	DWN	APVD
	BA	NEW RELEASE	04-MAR-10	MRS	St.P

FOR FURTHER INFORMATION SEE DATA SHEET FOR
SERIES SC - AXIAL LEADED POWER INDUCTORS

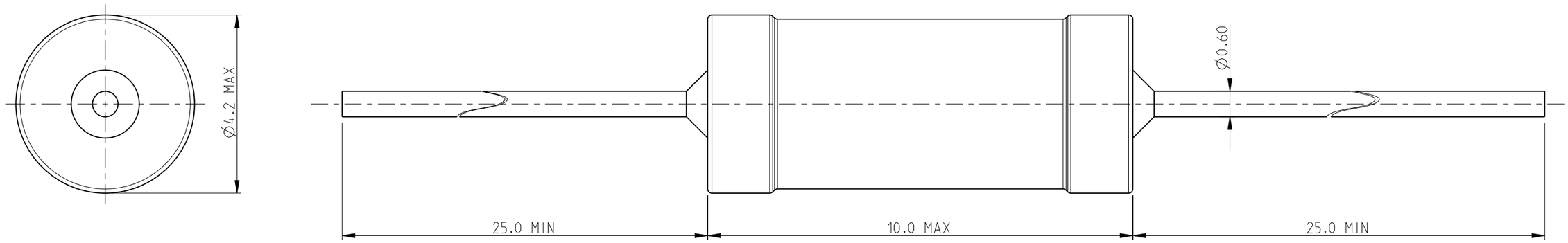

RoHS Compliant

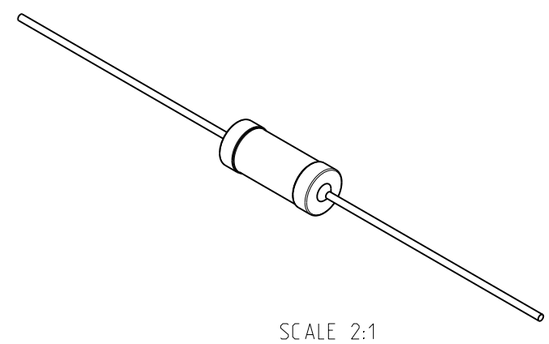

SCALE 2:1

THIS DRAWING IS A CONTROLLED DOCUMENT FOR TYCO ELECTRONICS CORPORATION
IT IS SUBJECT TO CHANGE AND THE CONTROLLING ENGINEERING ORGANIZATION
SHOULD BE CONTACTED FOR THE LATEST REVISION.

DIMENSIONS: mm

TOLERANCES UNLESS OTHERWISE SPECIFIED:

0 PLC	±0.2
1 PLC	±0.1
2 PLC	±-
3 PLC	±-
4 PLC	±-
ANGLES	±5°

MATERIAL –

FINISH –

DWN	MAHARUDRA	04-MAR-10
CHK	ALLAN.P	04-MAR-10
APVD	STEPHEN.P	04-MAR-10

PRODUCT SPEC –

APPLICATION SPEC –

WEIGHT –

Tyco Electronics

Tyco Electronics Corporation
Dorcan, Swindon, SN3 5HH

NAME
AXIAL LEADED POWER INDUCTORS
SERIES SC10

SIZE	CAGE CODE	DRAWING NO	RESTRICTED TO
A3	00779	C-1623957	–

CUSTOMER DRAWING

SCALE	SHEET	REV
10:1	1 OF 1	BA

AMP 1470-19 REV 31MAR2000

Pro/ENGINEER DRAWING