THIS DRAWING IS UNPUBLISHED. RELEASED FOR PUBLICATION -,- .
© COPYRIGHT - BY TYCO ELECTRONICS CORPORATION. ALL RIGHTS RESERVED.

LOC	DIST
AJ	16

REVISIONS

P	LTR	DESCRIPTION	DATE	DWN	APVD
	AL	REVISED PER ECO-10-008433	28MAY10	HMR	KW

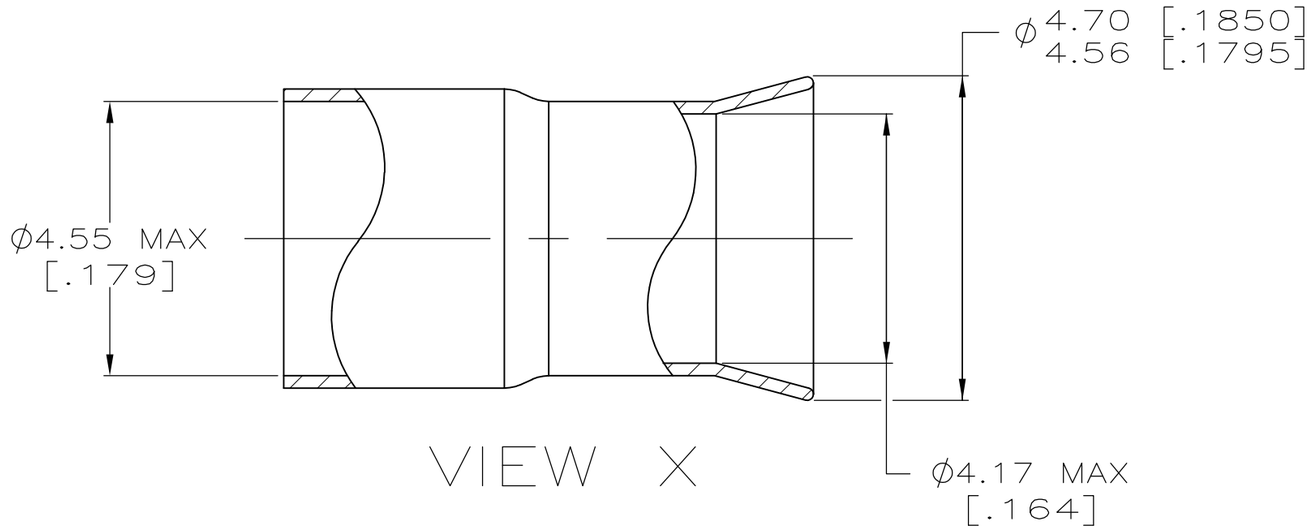

VIEW X

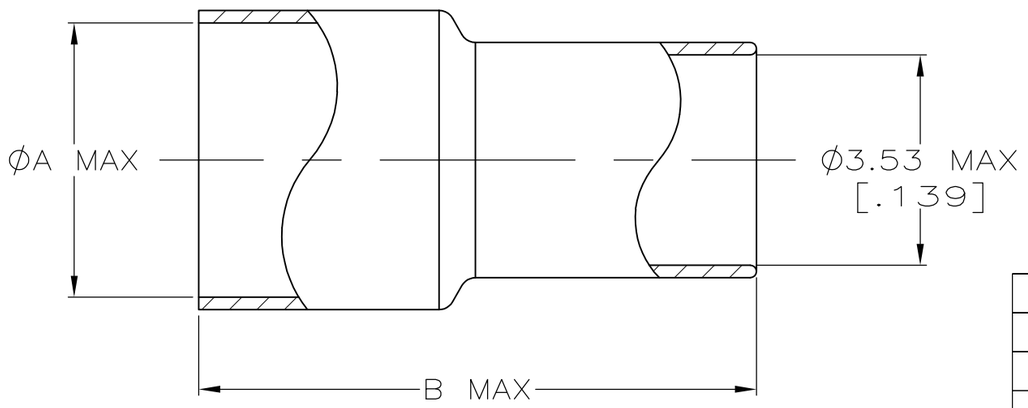

VIEW Y

1. COPPER ALLOY
2. GOLD PLATE PER MIL-G-45204 1.27μm [.000050] MIN THICKNESS
3. SILVER PLATE PER QQ-S-365, 5.08μm [.000200] MIN THICKNESS
4. TIN-LEAD PLATE PER ASTM-B-545, 2.54μm [.000100] MIN THICKNESS, WITH SUPPLEMENTAL ANTI FRETTING LUBRICANT.
5. TIN PLATE PER ASTM-B-545 WITH SUPLEMENTAL ANTI-FRETTING LUBRICANT.

	FINISH	B	A	VIEW	PART NUMBER
	5	9.22 [.363]	4.55 [.176]	Y	9-329049-1
	5	11.18 [.440]	4.75 [.187]	Y	9-329049-0
	2	8.76 [.345]	4.55 [.176]	X	3-329049-0
	4	11.18 [.440]	4.75 [.187]	Y	2-329049-9
	4	9.22 [.363]	4.55 [.176]	Y	2-329049-4
OBSOLETE	4	8.76 [.345]	4.55 [.176]	X	2-329049-3
	3	9.22 [.363]	4.55 [.176]	Y	2-329049-1
	3	8.76 [.345]	4.55 [.176]	X	329049

THIS DRAWING IS A CONTROLLED DOCUMENT.

DIMENSIONS: mm [INCHES]

TOLERANCES UNLESS OTHERWISE SPECIFIED:
0 PLC ± -
1 PLC ± -
2 PLC ± -
3 PLC ± -
4 PLC ± -
ANGLES ± -

MATERIAL: SEE NOTES
FINISH: SEE NOTES

DWN MICHAEL E. COWHER 16NOV95
CHK FRANK MORANA 16NOV95
APVD FRANK MORANA 16NOV95
PRODUCT SPEC —
APPLICATION SPEC —
WEIGHT —

Tyco Electronics
Tyco Electronics Corporation
Harrisburg, Pa 17105-3608

NAME: FERRULE, STEP DOWN

SIZE	CAGE CODE	DRAWING NO	RESTRICTED TO
A3	00779	C-329049	—

CUSTOMER DRAWING | SCALE 10:1 | SHEET 1 OF 1 | REV AL